SITE DEVELOPMENT PLAN OF LAND
"GOODRIDGE BROOK ESTATES"
Multi Unit & Single Family Subdivision Layout
LANCASTER, MASSACHUSETTS

DATE: FEBRUARY 8, 2018

Revised: April 10, 2018
July 6, 2018
July 25, 2018
Sept. 18, 2018

PROJECT SUMMARY:
62 SINGLE FAMILY HOUSE LOTS
120 APARTMENT STYLE UNITS
182 TOTAL PROPOSED UNITS

PROJECT DENSITY:
LOT B1 TOTAL LOT AREA: 833,833 ± S.F. (19.14 ± AC) Uplands Area: 427,585 S.F. Wetland Area: 406,248 S.F.
LOT B2 TOTAL LOT AREA: 1,144,579 ± S.F. (26.25 ± AC) Uplands Area: 976,958 S.F. Wetland Area: 167,621 S.F.

OWNER REFERENCE:
GLADY C KILBOURN
PO BOX 275
SO LANCASTER, MA

DEED REFERENCE:
REGISTRY OF DEEDS
BOOK 2922, PAGE 341

TOWN OF LANCASTER ASSESSOR'S REFERENCE

MAP 41, LOT 34B

PLAN REFERENCE:
WORCESTER COUNTY REGISTRY
1) PLAN BOOK 466, PLAN No. 69
2) PLAN BOOK 422, PLAN No. 76
3) PLAN BOOK 539, PLAN No. 80
4) PLAN BOOK 763, PLAN No. 63

ZONING TABLE
CLASSIFICATION: RESIDENTIAL

SUBDIVISION SCHEDULE:

	REQUIRED	PROPOSED
LOT AREA:	2.0 Acres	8,000 s.f. (Min)
FRONTAGE:	225 Feet	50 Feet (Min)
SETBACKS:		
FRONT:	74 Feet (Arterial) 60 Feet (Collector) 55 Feet (Minor)	20 Feet (Min)
SIDE:	20 Feet	10 Feet (Min)
REAR:	20 Feet	20 Feet (Min)

NOTE:
THE ON-SITE DRAINAGE SYSTEM IS SUBJECT TO A
"STORMWATER MANAGEMENT OPERATION AND MAINTENANCE PLAN"
FOR: GOODRIDGE BROOK ESTATES
DATED: JULY 6, 2018

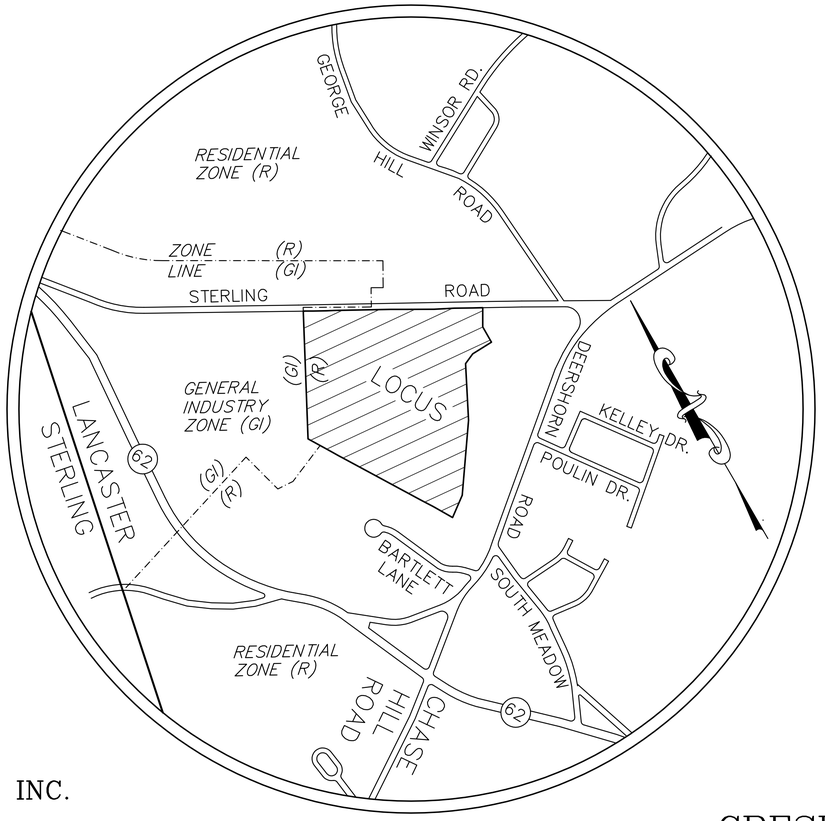

LOCUS MAP
1" = 600'

SHEET INDEX

PREPARED BY:
GLM ENGINEERING CONSULTANTS, INC.
19 EXCHANGE STREET
HOLLISTON, MASSACHUSETTS 01746
(508)429-1100 fax:(508)429-7160

PREPARED FOR:
CRESENT BUILDERS, INC.
94 NORTH MAIN STREET
BOYLSTON, MA 01583

JOYCE E. HASTINGS P.L.S. DATE

PAUL E. TRUAX, P.E. DATE

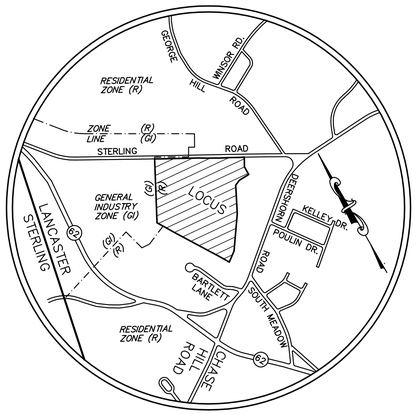

LOCUS MAP
1" = 1200'

LEGEND

- SEWER LINE (8" PVC TYP.)
- SEWER MANHOLE
- DRAINAGE LINE (12" CONC. TYP.)
- DRAINAGE MANHOLE
- CATCH BASIN
- WATER LINE
- WATERGATE
- HYDRANT
- WATER TEE
- CENTERLINE OF ROAD WAY
- MODIFIED CAPE COD BERM
- DENOTES CONC. BND. W/ D.H.
- 100' BUFFER ZONE
- EDGE OF VEGETATED WETLANDS
- WETLAND FLAG NO.
- EROSION CONTROL BARRIER
- WETLANDS
- UTILITY POLE
- PROPOSED SPOT ELEVATION
- EXISTING CONTOUR
- PROPOSED CONTOUR
- STONE WALL
- PROPOSED LIMIT OF CLEARING
- DRILL HOLE
- IRON PIN
- DEEP TEST HOLE

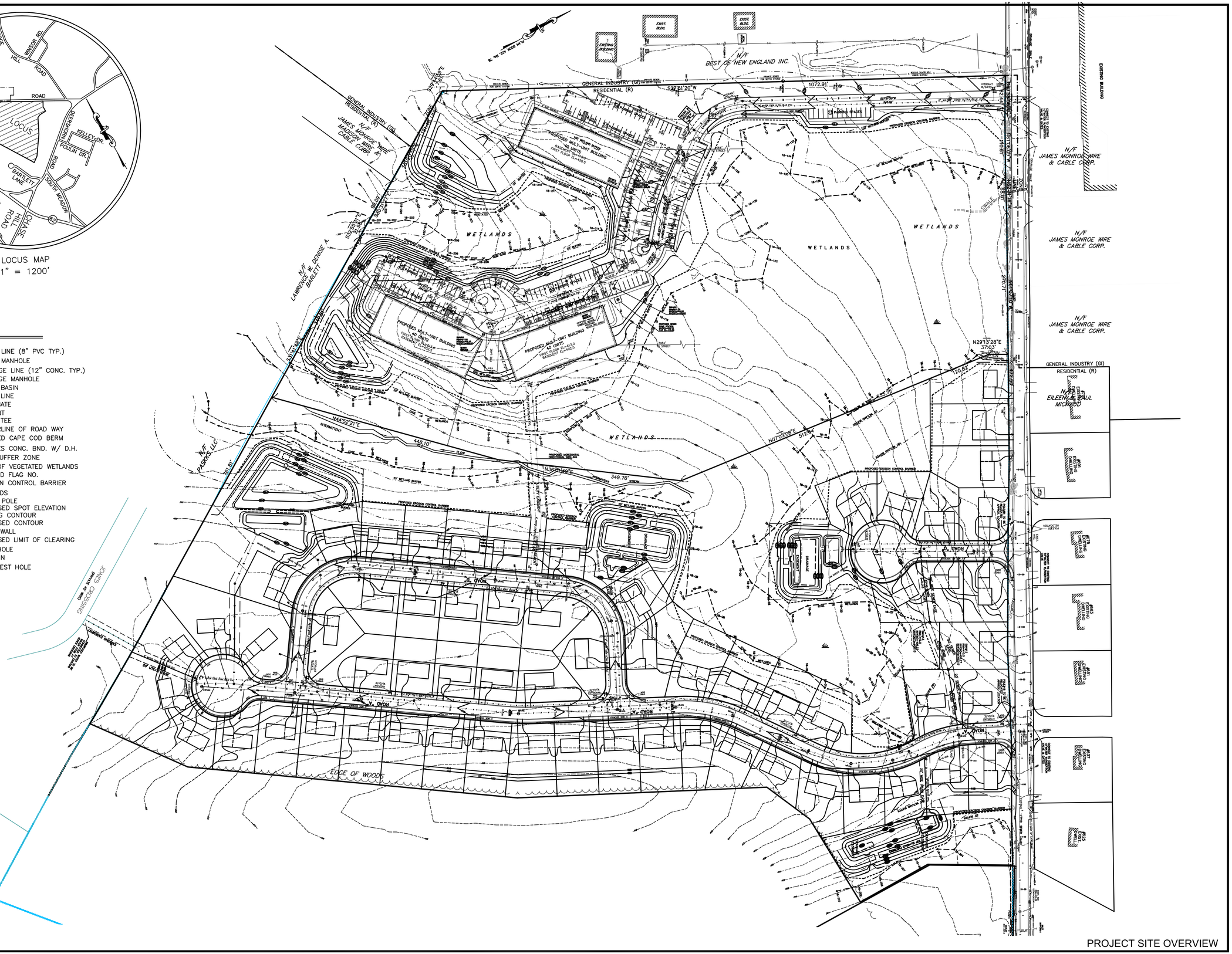

PROJECT SITE OVERVIEW

REVISIONS

No.	DATE	DESCRIPTION
1	04/10/18	APARTMENTS 136 UNITS
2	07/06/18	PLAN LAYOUT & DRAINAGE
3	07/25/18	WATER SYSTEM COMMENTS
4	09/18/18	ENGINEERING COMMENTS

SITE DEVELOPMENT PLAN
"GOODRIDGE BROOK ESTATES"
Multi Unit & Single Family Subdivision Layout
LANCASTER, MASSACHUSETTS

PREPARED FOR:
CRESCENT BUILDERS, INC.
94 NORTH MAIN STREET
BOYLSTON MA 01583

GLM Engineering Consultants, Inc.
19 EXCHANGE STREET
HOLLISTON, MA 01746
P: 508-429-1100
F: 508-429-7160
www.GLMengineering.com

DRW.: RST
JOB No. 12,274-DUPLEX
DATE: OCTOBER 4, 2017
SCALE: 1"= 80'
SHEET: 2 of 27
PLAN #: 27,147

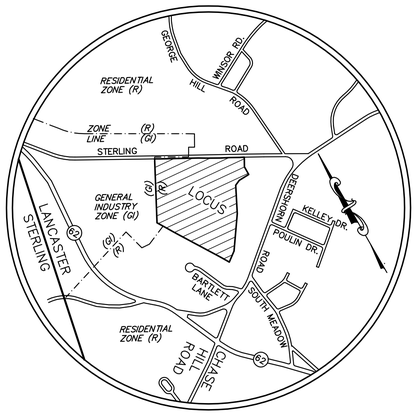

LOCUS MAP
1" = 1200'

LEGEND

- SEWER LINE (8" PVC TYP.)
- SEWER MANHOLE
- DRAINAGE LINE (12" CONC. TYP.)
- DRAINAGE MANHOLE
- CATCH BASIN
- WATER LINE
- WATERGATE
- HYDRANT
- WATER TEE
- CENTERLINE OF ROAD WAY
- MODIFIED CAPE COD BERM
- DENOTES CONC. BND. W/ D.H.
- 100' BUFFER ZONE
- EDGE OF VEGETATED WETLANDS
- #96-A WETLAND FLAG NO.
- E.C.B. EROSION CONTROL BARRIER
- WETLANDS
- UTILITY POLE
- 200x75 PROPOSED SPOT ELEVATION
- 394 EXISTING CONTOUR
- 400 PROPOSED CONTOUR
- STONE WALL
- PROPOSED LIMIT OF CLEARING
- DH. DRILL HOLE
- IP IRON PIN
- DH#08-8 DEEP TEST HOLE

EXISTING CONDITIONS

REVISIONS		
No.	DATE	DESCRIPTION
1	04/10/18	APARTMENTS 136 UNITS
2	07/06/18	PLAN LAYOUT & DRAINAGE
3	07/25/18	WATER SYSTEM COMMENTS
4	09/18/18	ENGINEERING COMMENTS

SITE DEVELOPMENT PLAN
"GOODRIDGE BROOK ESTATES"
Multi Unit & Single Family Subdivision Layout
LANCASTER, MASSACHUSETTS

PREPARED FOR:
CRESCENT BUILDERS, INC.
94 NORTH MAIN STREET
BOYLSTON MA 01583

GLM Engineering Consultants, Inc.
19 EXCHANGE STREET
HOLLISTON, MA 01746
P: 508-429-1100
F: 508-429-7160
www.GLMengineering.com

DRW.: RST
JOB No. 12,274-DUPLEX
DATE: OCTOBER 4, 2017
SCALE: 1"= 80'
SHEET: 3 of 27
PLAN #: 27,147

LEGEND

- SEWER LINE (8" PVC TYP.)
- SEWER MANHOLE
- DRAINAGE LINE (12" CONC. TYP.)
- DRAINAGE MANHOLE
- CATCH BASIN
- WATER LINE
- WATERGATE
- HYDRANT
- WATER TEE
- CENTERLINE OF ROAD WAY
- MODIFIED CAPE COD BERM
- DENOTES CONC. BND. W/ D.H.
- 100' BUFFER ZONE
- EDGE OF VEGETATED WETLANDS
- #96-A WETLAND FLAG NO.
- E.C.B. EROSION CONTROL BARRIER
- WETLANDS
- UTILITY POLE
- 200x75 PROPOSED SPOT ELEVATION
- 394 EXISTING CONTOUR
- 400 PROPOSED CONTOUR
- STONE WALL
- PROPOSED LIMIT OF CLEARING
- DH. DRILL HOLE
- IP IRON PIN
- DH#08-8 DEEP TEST HOLE

TOWN OF LANCASTER ASSESSOR'S REFERENCE

MAP 41, LOT 34B

PROJECT SUMMARY:
62 SINGLE FAMILY HOUSE LOTS
120 APARTMENT STYLE UNITS
182 TOTAL PROPOSED UNITS

PLAN REFERENCE:
WORCESTER COUNTY REGISTRY
1) PLAN BOOK 466, PLAN No. 69
2) PLAN BOOK 422, PLAN No. 76
3) PLAN BOOK 539, PLAN No. 80
4) PLAN BOOK 763, PLAN No. 63

TOTAL PARCEL AREA: 45.4 ACRES

OWNER REFERENCE:
GLADY C KILBOURN
PO BOX 275
SO LANCASTER, MA

DEED REFERENCE:
REGISTRY OF DEEDS
BOOK 2922, PAGE 341

ZONING TABLE
CLASSIFICATION: RESIDENTIAL

SUBDIVISION SCHEDULE:

	REQUIRED	PROPOSED
LOT AREA:	2.0 Acres	8,000 s.f. (Min)
FRONTAGE:	225 Feet	50 Feet (Min)
SETBACKS:		
FRONT:	74 Feet (Arterial) 60 Feet (Collector) 55 Feet (Minor)	20 Feet (Min)
SIDE:	20 Feet	10 Feet (Min)
REAR:	20 Feet	20 Feet (Min)

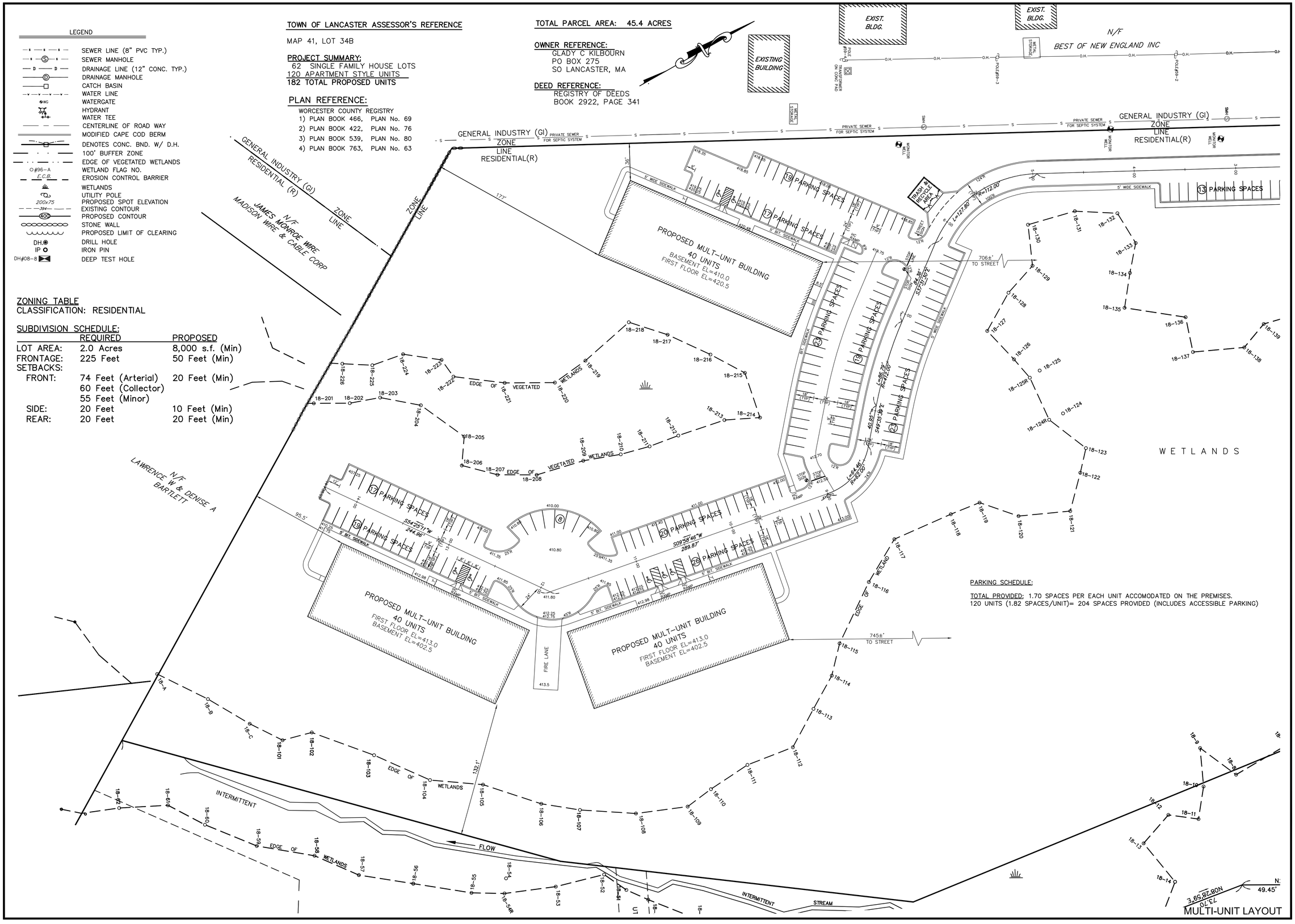

PARKING SCHEDULE:

TOTAL PROVIDED: 1.70 SPACES PER EACH UNIT ACCOMODATED ON THE PREMISES.
120 UNITS (1.82 SPACES/UNIT)= 204 SPACES PROVIDED (INCLUDES ACCESSIBLE PARKING)

REVISIONS

No.	DATE	DESCRIPTION
1	04/10/18	APARTMENTS 136 UNITS
2	07/06/18	PLAN LAYOUT & DRAINAGE
3	07/25/18	WATER SYSTEM COMMENTS
4	09/18/18	ENGINEERING COMMENTS

SITE DEVELOPMENT PLAN
"GOODRIDGE BROOK ESTATES"
Multi Unit & Single Family Subdivision Layout
LANCASTER, MASSACHUSETTS

PREPARED FOR:
CRESCENT BUILDERS, INC.
94 NORTH MAIN STREET
BOYLSTON MA 01583

GLM Engineering Consultants, Inc.
19 EXCHANGE STREET
HOLLISTON, MA 01746
P: 508-429-1100
F: 508-429-7160
www.GLMengineering.com

DRW.: RST
JOB No. 12,274
DATE: FEBRUARY 8, 2018
SCALE: 1"= 40'
SHEET: 4 of 27
PLAN #: 27,147

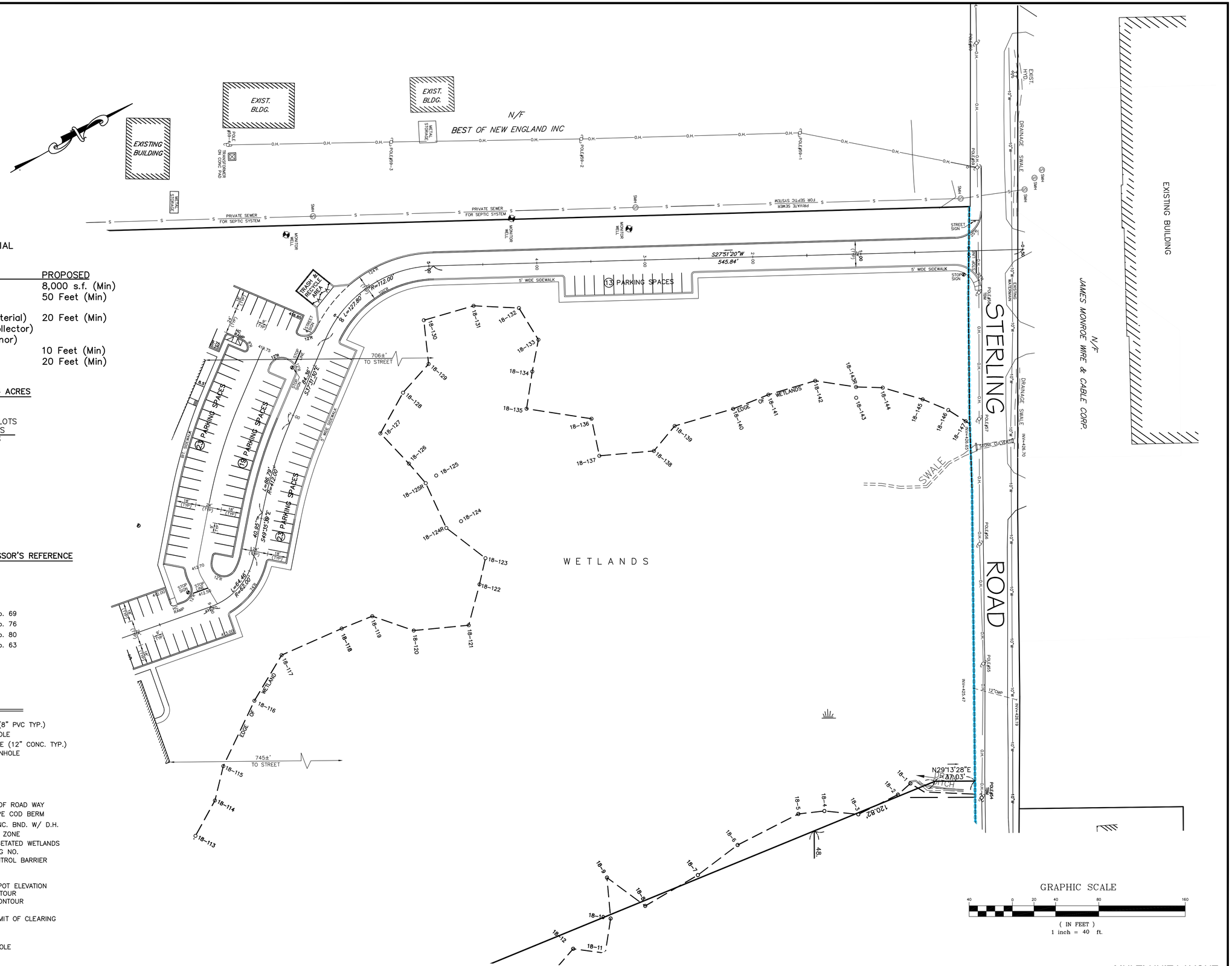

ZONING TABLE
CLASSIFICATION: RESIDENTIAL

SUBDIVISION SCHEDULE:

	REQUIRED	PROPOSED
LOT AREA:	2.0 Acres	8,000 s.f. (Min)
FRONTAGE:	225 Feet	50 Feet (Min)
SETBACKS:		
FRONT:	74 Feet (Arterial)	20 Feet (Min)
	60 Feet (Collector)	
	55 Feet (Minor)	
SIDE:	20 Feet	10 Feet (Min)
REAR:	20 Feet	20 Feet (Min)

TOTAL PARCEL AREA: 45.4 ACRES

PROJECT SUMMARY:
62 SINGLE FAMILY HOUSE LOTS
120 APARTMENT STYLE UNITS
182 TOTAL PROPOSED UNITS

OWNER REFERENCE:
GLADY C KILBOURN
PO BOX 275
SO LANCASTER, MA

DEED REFERENCE:
REGISTRY OF DEEDS
BOOK 2922, PAGE 341

TOWN OF LANCASTER ASSESSOR'S REFERENCE

MAP 41, LOT 34B

PLAN REFERENCE:
WORCESTER COUNTY REGISTRY
1) PLAN BOOK 466, PLAN No. 69
2) PLAN BOOK 422, PLAN No. 76
3) PLAN BOOK 539, PLAN No. 80
4) PLAN BOOK 763, PLAN No. 63

LEGEND

—S—S—S—	SEWER LINE (8" PVC TYP.)
—S—(S)—S—	SEWER MANHOLE
—D——D—	DRAINAGE LINE (12" CONC. TYP.)
—(D)—	DRAINAGE MANHOLE
—□—	CATCH BASIN
—W—W—W—	WATER LINE
WG	WATERGATE
	HYDRANT
	WATER TEE
—— ——	CENTERLINE OF ROAD WAY
	MODIFIED CAPE COD BERM
	DENOTES CONC. BND. W/ D.H.
— · · —	100' BUFFER ZONE
— · · — · · —	EDGE OF VEGETATED WETLANDS
O #96-A	WETLAND FLAG NO.
E.C.B.	EROSION CONTROL BARRIER
	WETLANDS
	UTILITY POLE
200x75	PROPOSED SPOT ELEVATION
—394—	EXISTING CONTOUR
400	PROPOSED CONTOUR
	STONE WALL
	PROPOSED LIMIT OF CLEARING
DH.	DRILL HOLE
IP	IRON PIN
DH#08-8	DEEP TEST HOLE

MULTI-UNIT LAYOUT

REVISIONS

No.	DATE	DESCRIPTION
1	04/10/18	APARTMENTS 136 UNITS
2	07/06/18	PLAN LAYOUT & DRAINAGE
3	07/25/18	WATER SYSTEM COMMENTS
4	09/18/18	ENGINEERING COMMENTS

SITE DEVELOPMENT PLAN
"GOODRIDGE BROOK ESTATES"
Multi Unit & Single Family Subdivision Layout
LANCASTER, MASSACHUSETTS

PREPARED FOR:
CRESCENT BUILDERS, INC.
94 NORTH MAIN STREET
BOYLSTON MA 01583

GLM Engineering Consultants, Inc.
19 EXCHANGE STREET
HOLLISTON, MA 01746
P: 508-429-1100
F: 508-429-7160
www.GLMengineering.com

DRW.: RST
JOB No. 12,274
DATE: FEBRUARY 8, 2018
SCALE: 1"= 40'
SHEET: 5 of 27
PLAN #: 27,147

PLAN REFERENCE:
WORCESTER COUNTY REGISTRY
1) PLAN BOOK 466, PLAN No. 69
2) PLAN BOOK 422, PLAN No. 76
3) PLAN BOOK 539, PLAN No. 80
4) PLAN BOOK 763, PLAN No. 63

ZONING TABLE
CLASSIFICATION: RESIDENTIAL

SUBDIVISION SCHEDULE:

	REQUIRED	PROPOSED
LOT AREA:	2.0 Acres	8,000 s.f. (Min)
FRONTAGE:	225 Feet	50 Feet (Min)
SETBACKS:		
FRONT:	74 Feet (Arterial)	20 Feet (Min)
	60 Feet (Collector)	
	55 Feet (Minor)	
SIDE:	20 Feet	10 Feet (Min)
REAR:	20 Feet	20 Feet (Min)

TOTAL PARCEL AREA: 45.4 ACRES

PROJECT SUMMARY:
62 SINGLE FAMILY HOUSE LOTS
120 APARTMENT STYLE UNITS
182 TOTAL PROPOSED UNITS

OWNER REFERENCE:
GLADY C KILBOURN
PO BOX 275
SO LANCASTER, MA

DEED REFERENCE:
REGISTRY OF DEEDS
BOOK 2922, PAGE 341

TOWN OF LANCASTER ASSESSOR'S REFERENCE
MAP 41, LOT 34B

LEGEND

- SEWER LINE (8" PVC TYP.)
- SEWER MANHOLE
- DRAINAGE LINE (12" CONC. TYP.)
- DRAINAGE MANHOLE
- CATCH BASIN
- WATER LINE
- WATERGATE
- HYDRANT
- WATER TEE
- CENTERLINE OF ROAD WAY
- MODIFIED CAPE COD BERM
- DENOTES CONC. BND. W/ D.H.
- 100' BUFFER ZONE
- EDGE OF VEGETATED WETLANDS
- WETLAND FLAG NO.
- EROSION CONTROL BARRIER
- WETLANDS
- UTILITY POLE
- PROPOSED SPOT ELEVATION
- EXISTING CONTOUR
- PROPOSED CONTOUR
- STONE WALL
- PROPOSED LIMIT OF CLEARING
- DRILL HOLE
- IRON PIN
- DEEP TEST HOLE

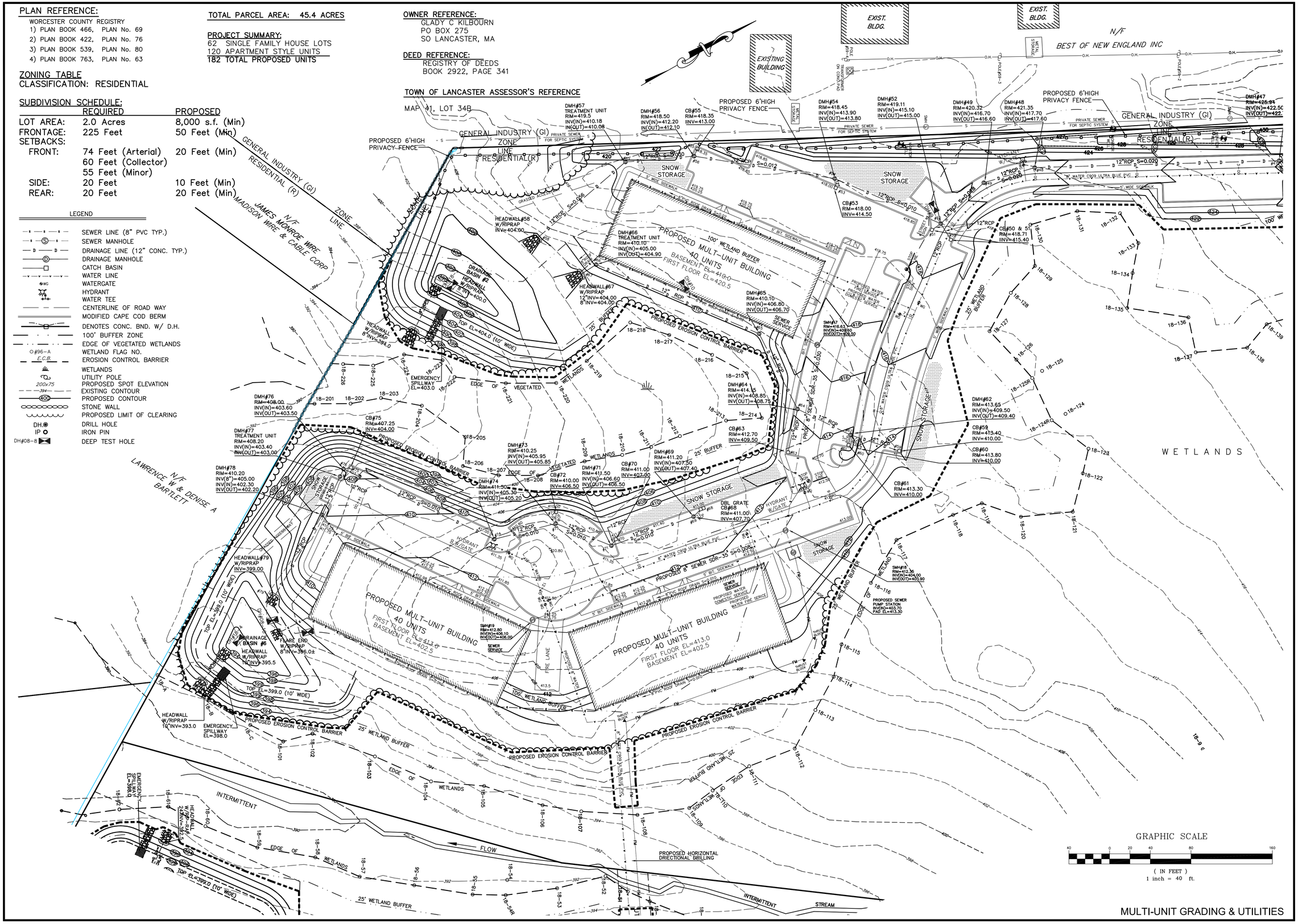

MULTI-UNIT GRADING & UTILITIES

REVISIONS

No.	DATE	DESCRIPTION
1	04/10/18	APARTMENTS 136 UNITS
2	07/06/18	PLAN LAYOUT & DRAINAGE
3	07/25/18	WATER SYSTEM COMMENTS
4	09/18/18	ENGINEERING COMMENTS

SITE DEVELOPMENT PLAN
"GOODRIDGE BROOK ESTATES"
Multi Unit & Single Family Subdivision Layout
LANCASTER, MASSACHUSETTS

PREPARED FOR:
CRESCENT BUILDERS, INC.
94 NORTH MAIN STREET
BOYLSTON MA 01583

GLM Engineering Consultants, Inc.
19 EXCHANGE STREET
HOLLISTON, MA 01746
P: 508-429-1100
F: 508-429-7160
www.GLMengineering.com

DRW.: RST
JOB No. 12,274
DATE: FEBRUARY 8, 2018
SCALE: 1"= 40'
SHEET: 6 of 27
PLAN #: 27,147

ZONING TABLE
CLASSIFICATION: RESIDENTIAL

SUBDIVISION SCHEDULE:

	REQUIRED	PROPOSED
LOT AREA:	2.0 Acres	8,000 s.f. (Min)
FRONTAGE:	225 Feet	50 Feet (Min)
SETBACKS:		
FRONT:	74 Feet (Arterial)	20 Feet (Min)
	60 Feet (Collector)	
	55 Feet (Minor)	
SIDE:	20 Feet	10 Feet (Min)
REAR:	20 Feet	20 Feet (Min)

TOTAL PARCEL AREA: 45.4 ACRES

PROJECT SUMMARY:
62 SINGLE FAMILY HOUSE LOTS
120 APARTMENT STYLE UNITS
182 TOTAL PROPOSED UNITS

OWNER REFERENCE:
GLADY C KILBOURN
PO BOX 275
SO LANCASTER, MA

DEED REFERENCE:
REGISTRY OF DEEDS
BOOK 2922, PAGE 341

TOWN OF LANCASTER ASSESSOR'S REFERENCE

MAP 41, LOT 34B

PLAN REFERENCE:
WORCESTER COUNTY REGISTRY
1) PLAN BOOK 466, PLAN No. 69
2) PLAN BOOK 422, PLAN No. 76
3) PLAN BOOK 539, PLAN No. 80
4) PLAN BOOK 763, PLAN No. 63

LEGEND

	SEWER LINE (8" PVC TYP.)
	SEWER MANHOLE
	DRAINAGE LINE (12" CONC. TYP.)
	DRAINAGE MANHOLE
	CATCH BASIN
	WATER LINE
	WATERGATE
	HYDRANT
	WATER TEE
	CENTERLINE OF ROAD WAY
	MODIFIED CAPE COD BERM
	DENOTES CONC. BND. W/ D.H.
	100' BUFFER ZONE
	EDGE OF VEGETATED WETLANDS
O #96-A	WETLAND FLAG NO.
E.C.B.	EROSION CONTROL BARRIER
	WETLANDS
	UTILITY POLE
200x75	PROPOSED SPOT ELEVATION
394	EXISTING CONTOUR
400	PROPOSED CONTOUR
	STONE WALL
	PROPOSED LIMIT OF CLEARING
DH.	DRILL HOLE
IP	IRON PIN
DH#08-8	DEEP TEST HOLE

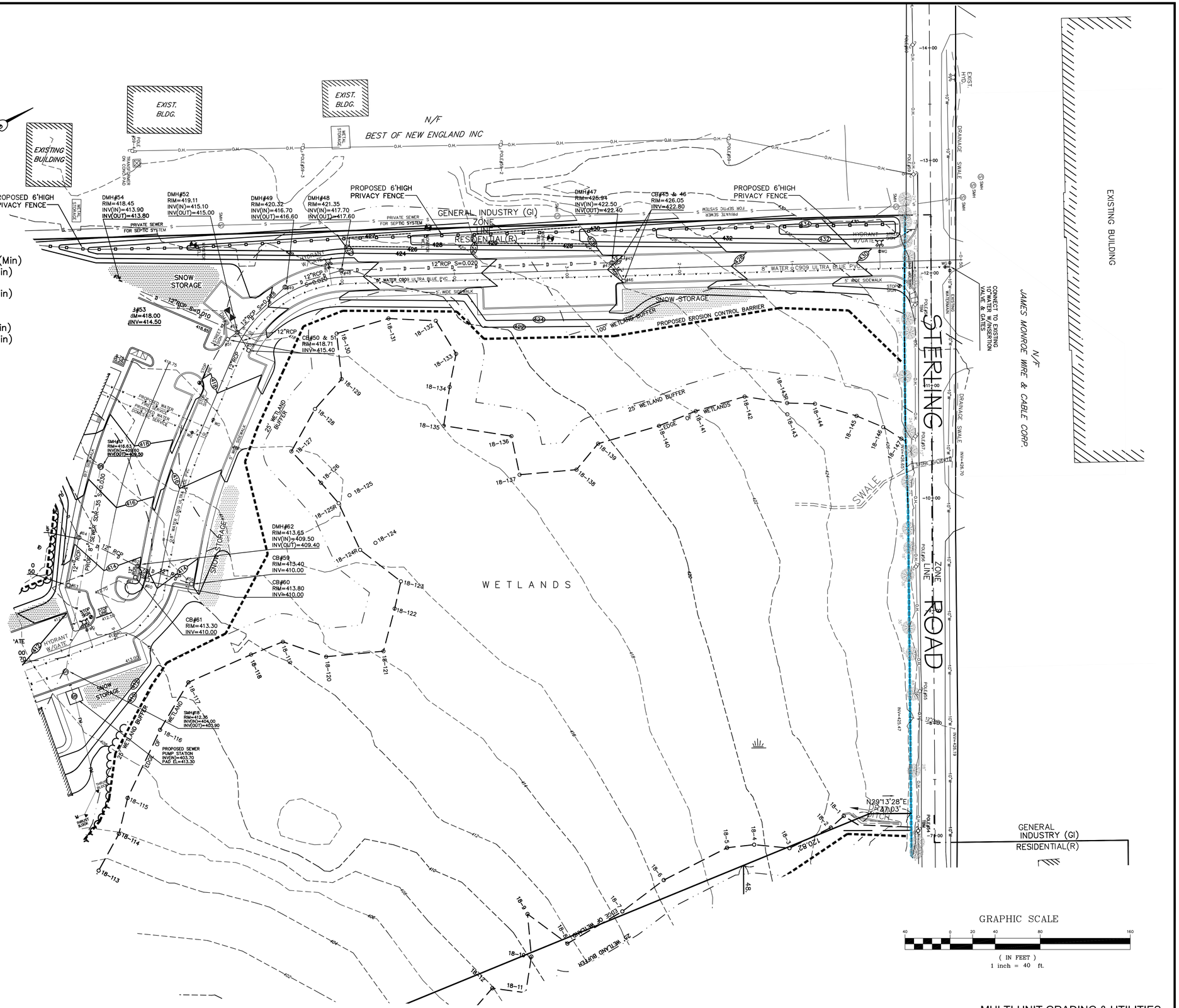

MULTI-UNIT GRADING & UTILITIES

REVISIONS

No.	DATE	DESCRIPTION
1	04/10/18	APARTMENTS 136 UNITS
2	07/06/18	PLAN LAYOUT & DRAINAGE
3	07/25/18	WATER SYSTEM COMMENTS
4	09/18/18	ENGINEERING COMMENTS

SITE DEVELOPMENT PLAN
"GOODRIDGE BROOK ESTATES"
Multi Unit & Single Family Subdivision Layout
LANCASTER, MASSACHUSETTS
PREPARED FOR:
CRESCENT BUILDERS, INC.
94 NORTH MAIN STREET
BOYLSTON MA 01583

GLM Engineering Consultants, Inc.
19 EXCHANGE STREET
HOLLISTON, MA 01746
P: 508-429-1100
F: 508-429-7160
www.GLMengineering.com

DRW.: RST
JOB No. 12,274
DATE: FEBRUARY 8, 2018
SCALE: 1"= 40'
SHEET: 7 of 27
PLAN #: 27,147

FOR REGISTRY OF DEEDS USE ONLY

ZONING TABLE
CLASSIFICATION: RESIDENTIAL

SUBDIVISION SCHEDULE:

	REQUIRED	PROPOSED
LOT AREA:	2.0 Acres	8,000 s.f. (Min)
FRONTAGE:	225 Feet	50 Feet (Min)
SETBACKS:		
FRONT:	74 Feet (Arterial) 60 Feet (Collector) 55 Feet (Minor)	20 Feet (Min)
SIDE:	20 Feet	10 Feet (Min)
REAR:	20 Feet	20 Feet (Min)

I HEREBY CERTIFY THAT THE NOTICE OF APPROVAL OF THIS PLAN BY THE LANCASTER ZONING BOARD OF APPEALS WAS RECIEVED AND RECORDED AT THIS OFFICE AND NO APPEAL WAS RECIEVED DURING THE 20 DAYS NEXT AFTER SUCH RECIEPT OF RECORDING OF SAID NOTICE.

TOWN CLERK _____ DATE _____

APPROVAL UNDER THE SUBDIVISION CONTROL LAW
LANCASTER BOARD OF APPEALS

DATE : _____

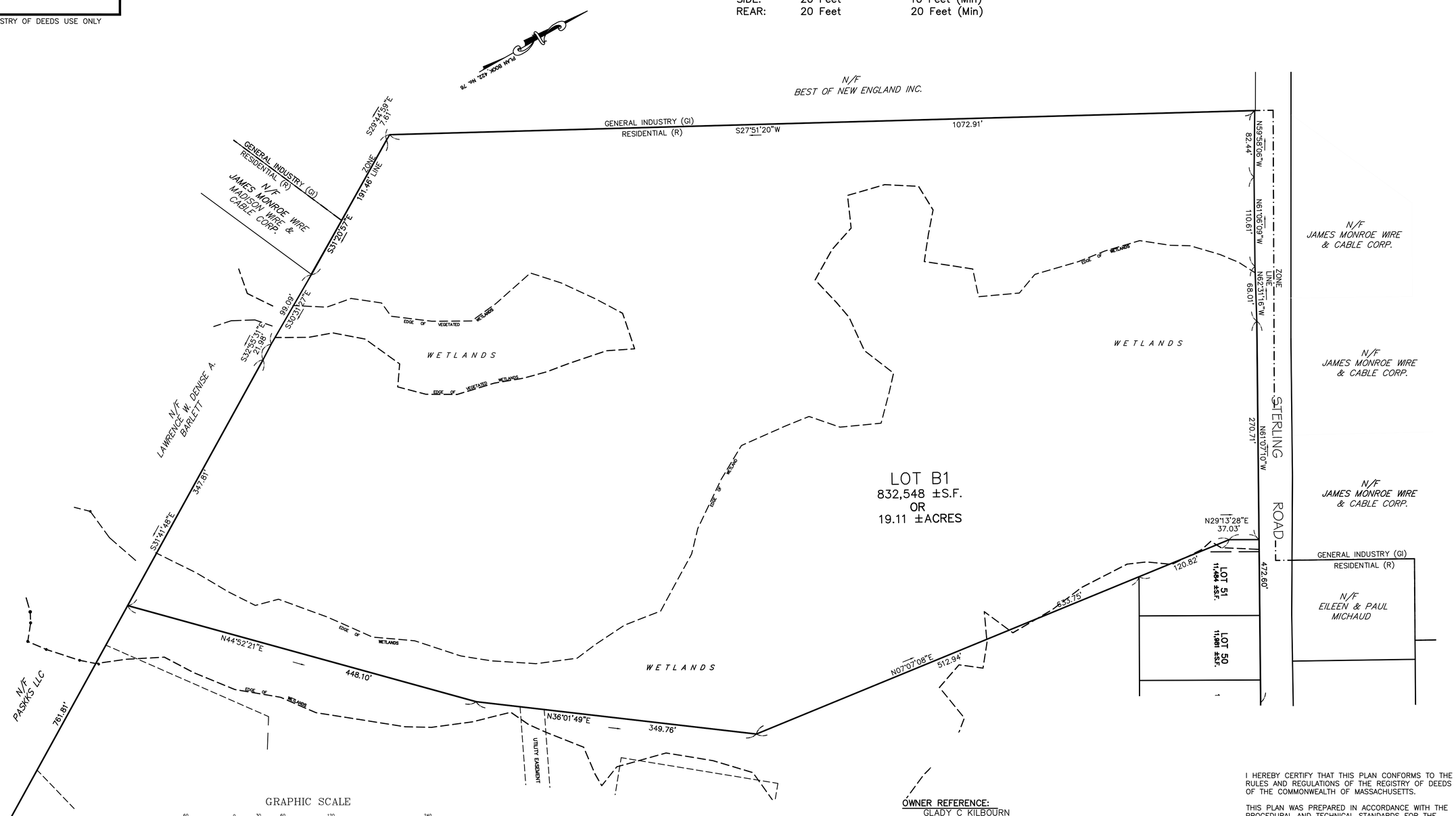

PLAN REFERENCES:
WORCESTER COUNTY REGISTRY OF DEEDS
1) PLAN BOOK 466, PLAN No. 69
2) PLAN BOOK 422, PLAN No. 76
3) PLAN BOOK 539, PLAN No. 80
4) PLAN BOOK 763, PLAN No. 63

OWNER REFERENCE:
GLADY C KILBOURN
PO BOX 275
SO LANCASTER, MA

DEED REFERENCE:
REGISTRY OF DEEDS
BOOK 2922, PAGE 341

TOWN OF LANCASTER ASSESSOR'S REFERENCE
MAP 41, LOT 34B

I HEREBY CERTIFY THAT THIS PLAN CONFORMS TO THE RULES AND REGULATIONS OF THE REGISTRY OF DEEDS OF THE COMMONWEALTH OF MASSACHUSETTS.

THIS PLAN WAS PREPARED IN ACCORDANCE WITH THE PROCEDURAL AND TECHNICAL STANDARDS FOR THE PRACTICE OF LAND SURVEYING IN THE COMMONWEALTH OF MASSACHUSETTS.

JOYCE E. HASTINGS , P.L.S. DATE

LOT LAYOUT 1 OF 4

REVISIONS

No.	DATE	DESCRIPTION
1	04/10/18	APARTMENTS 136 UNITS
2	07/06/18	PLAN LAYOUT & DRAINAGE
3	07/25/18	WATER SYSTEM COMMENTS
4	09/18/18	ENGINEERING COMMENTS

SITE DEVELOPMENT PLAN
"GOODRIDGE BROOK ESTATES"
Multi Unit & Single Family Subdivision Layout
LANCASTER, MASSACHUSETTS

PREPARED FOR:
CRESCENT BUILDERS, INC.
94 NORTH MAIN STREET
BOYLSTON MA 01583

GLM Engineering Consultants, Inc.
19 EXCHANGE STREET
HOLLISTON, MA 01746
P: 508-429-1100
F: 508-429-7160
www.GLMengineering.com

DRW.: RST
JOB No. 12,274-DUPLEX
DATE: OCTOBER 4, 2017
SCALE: 1"= 60'
SHEET: 8 of 27
PLAN #: 27,147

FOR REGISTRY OF DEEDS USE ONLY

I HEREBY CERTIFY THAT THE NOTICE OF APPROVAL OF THIS PLAN BY THE LANCASTER ZONING BOARD OF APPEALS WAS RECIEVED AND RECORDED AT THIS OFFICE AND NO APPEAL WAS RECIEVED DURING THE 20 DAYS NEXT AFTER SUCH RECIEPT OF RECORDING OF SAID NOTICE.

TOWN CLERK _____ DATE _____

APPROVAL UNDER THE SUBDIVISION CONTROL LAW
LANCASTER BOARD OF APPEALS

DATE : _____

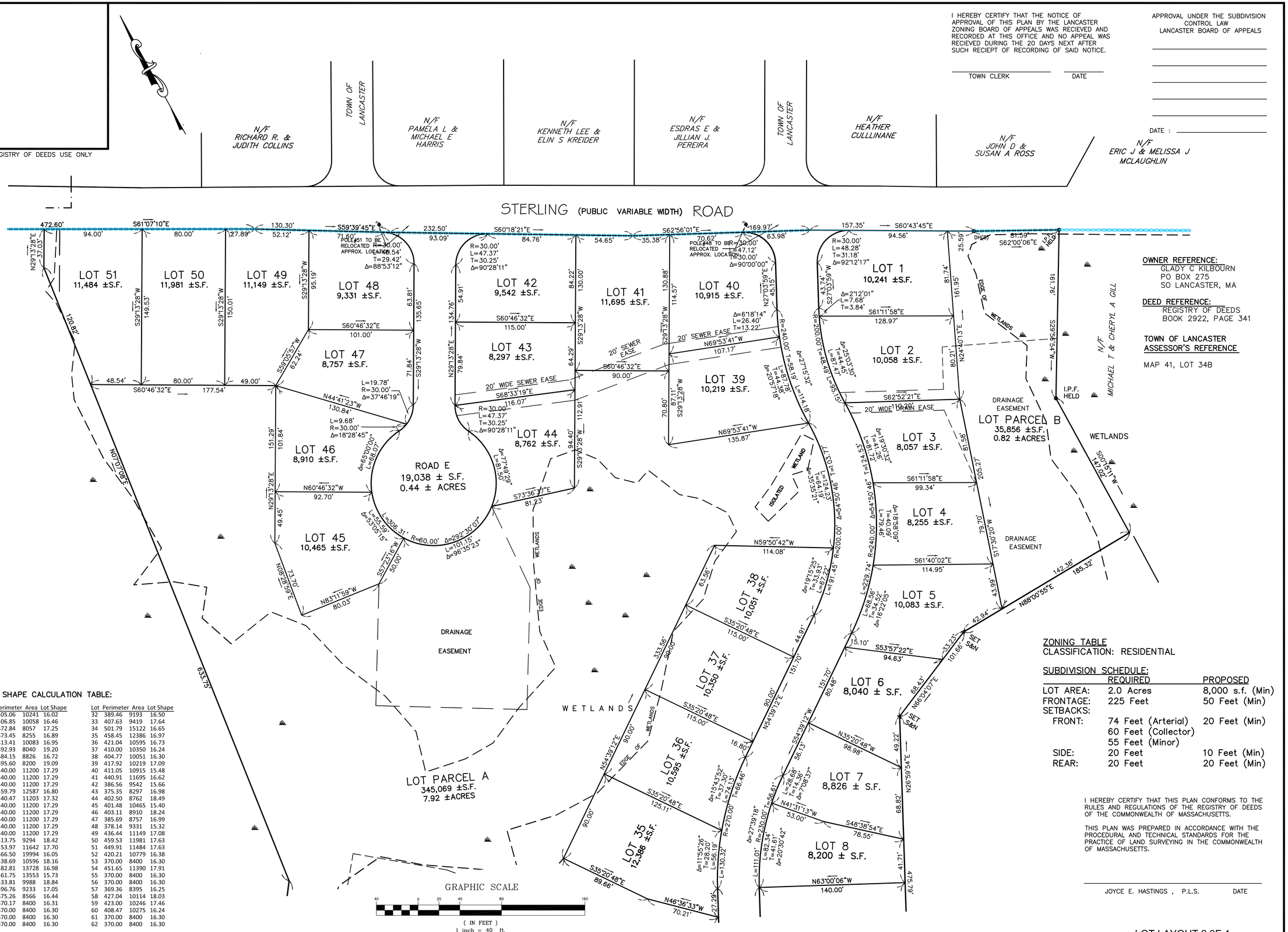

OWNER REFERENCE:
GLADY C KILBOURN
PO BOX 275
SO LANCASTER, MA

DEED REFERENCE:
REGISTRY OF DEEDS
BOOK 2922, PAGE 341

TOWN OF LANCASTER
ASSESSOR'S REFERENCE

MAP 41, LOT 34B

ZONING TABLE
CLASSIFICATION: RESIDENTIAL

SUBDIVISION SCHEDULE:

	REQUIRED	PROPOSED
LOT AREA:	2.0 Acres	8,000 s.f. (Min)
FRONTAGE:	225 Feet	50 Feet (Min)
SETBACKS:		
FRONT:	74 Feet (Arterial)	20 Feet (Min)
	60 Feet (Collector)	
	55 Feet (Minor)	
SIDE:	20 Feet	10 Feet (Min)
REAR:	20 Feet	20 Feet (Min)

LOT SHAPE CALCULATION TABLE:

Lot	Perimeter	Area	Lot Shape
1	405.06	10241	16.02
2	406.85	10058	16.46
3	372.84	8057	17.25
4	373.45	8255	16.89
5	413.41	10083	16.95
6	392.93	8040	19.20
7	384.15	8826	16.72
8	395.60	8200	19.09
9	440.00	11200	17.29
10	440.00	11200	17.29
11	440.00	11200	17.29
12	459.79	12587	16.80
13	440.47	11203	17.32
14	440.00	11200	17.29
15	440.00	11200	17.29
16	440.00	11200	17.29
17	440.00	11200	17.29
18	440.00	11200	17.29
19	413.75	9294	18.42
20	453.97	11642	17.70
21	566.50	19994	16.05
22	438.69	10596	18.16
23	482.81	13728	16.98
24	461.75	13553	15.73
25	433.81	9988	18.84
26	396.76	9233	17.05
27	375.26	8566	16.44
28	370.17	8400	16.31
29	370.00	8400	16.30
30	370.00	8400	16.30
31	370.00	8400	16.30
32	389.46	9193	16.50
33	407.63	9419	17.64
34	501.79	15122	16.65
35	458.45	12386	16.97
36	421.04	10595	16.73
37	410.00	10350	16.24
38	404.77	10051	16.30
39	417.92	10219	17.09
40	411.05	10915	15.48
41	440.91	11695	16.62
42	386.56	9542	15.66
43	375.35	8297	16.98
44	402.50	8762	18.49
45	401.48	10465	15.40
46	403.11	8910	18.24
47	385.69	8757	16.99
48	378.14	9331	15.32
49	436.44	11149	17.08
50	459.53	11981	17.63
51	449.91	11484	17.63
52	420.21	10779	16.38
53	370.00	8400	16.30
54	451.65	11390	17.91
55	370.00	8400	16.30
56	370.00	8400	16.30
57	369.36	8395	16.25
58	427.04	10114	18.03
59	423.00	10246	17.46
60	408.47	10275	16.24
61	370.00	8400	16.30
62	370.00	8400	16.30

I HEREBY CERTIFY THAT THIS PLAN CONFORMS TO THE RULES AND REGULATIONS OF THE REGISTRY OF DEEDS OF THE COMMONWEALTH OF MASSACHUSETTS.

THIS PLAN WAS PREPARED IN ACCORDANCE WITH THE PROCEDURAL AND TECHNICAL STANDARDS FOR THE PRACTICE OF LAND SURVEYING IN THE COMMONWEALTH OF MASSACHUSETTS.

JOYCE E. HASTINGS , P.L.S. DATE

LOT LAYOUT 2 0F 4

REVISIONS

No.	DATE	DESCRIPTION
1	04/10/18	APARTMENTS 136 UNITS
2	07/06/18	PLAN LAYOUT & DRAINAGE
3	07/25/18	WATER SYSTEM COMMENTS
4	09/18/18	ENGINEERING COMMENTS

SITE DEVELOPMENT PLAN "GOODRIDGE BROOK ESTATES" Multi Unit & Single Family Subdivision Layout LANCASTER, MASSACHUSETTS

PREPARED FOR:
CRESCENT BUILDERS, INC.
94 NORTH MAIN STREET
BOYLSTON MA 01583

GLM Engineering Consultants, Inc.
19 EXCHANGE STREET
HOLLISTON, MA 01746
P: 508-429-1100
F: 508-429-7160
www.GLMengineering.com

DRW.: RST
JOB No. 12,274
DATE: FEBRUARY 8, 2018
SCALE: 1"= 40'
SHEET: 9 of 27
PLAN #: 27,147

FOR REGISTRY OF DEEDS USE ONLY

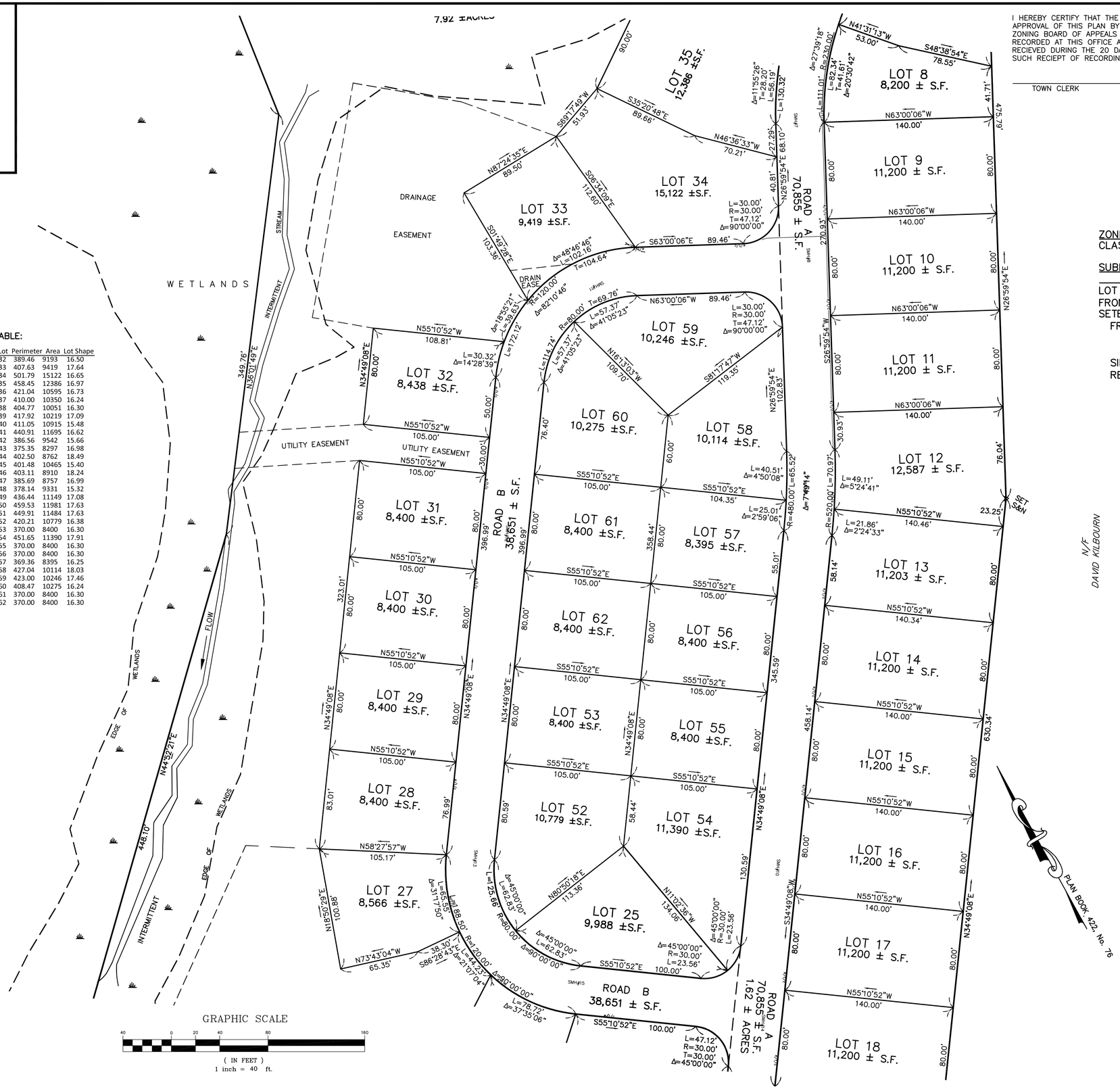

LOT SHAPE CALCULATION TABLE:

Lot	Perimeter	Area	Lot Shape
1	405.06	10241	16.02
2	406.85	10058	16.46
3	372.84	8057	17.25
4	373.45	8255	16.89
5	413.41	10083	16.95
6	392.93	8040	19.20
7	384.15	8826	16.72
8	395.60	8200	19.09
9	440.00	11200	17.29
10	440.00	11200	17.29
11	440.00	11200	17.29
12	459.79	12587	16.80
13	440.47	11203	17.32
14	440.00	11200	17.29
15	440.00	11200	17.29
16	440.00	11200	17.29
17	440.00	11200	17.29
18	440.00	11200	17.29
19	413.75	9294	18.42
20	453.97	11642	17.70
21	566.50	19994	16.05
22	438.69	10596	18.16
23	482.81	13728	16.98
24	461.75	13553	15.73
25	433.81	9988	18.84
26	396.76	9233	17.05
27	375.26	8566	16.44
28	370.17	8400	16.31
29	370.00	8400	16.30
30	370.00	8400	16.30
31	370.00	8400	16.30
32	389.46	9193	16.50
33	407.63	9419	17.64
34	501.79	15122	16.65
35	458.45	12386	16.97
36	421.04	10595	16.73
37	410.00	10350	16.24
38	404.77	10051	16.30
39	417.92	10219	17.09
40	411.05	10915	15.48
41	440.91	11695	16.62
42	386.56	9542	15.66
43	375.35	8297	16.98
44	402.50	8762	18.49
45	401.48	10465	15.40
46	403.11	8910	18.24
47	385.69	8757	16.99
48	378.14	9331	15.32
49	436.44	11149	17.08
50	459.53	11981	17.63
51	449.91	11484	17.63
52	420.21	10779	16.38
53	370.00	8400	16.30
54	451.65	11390	17.91
55	370.00	8400	16.30
56	370.00	8400	16.30
57	369.36	8395	16.25
58	427.04	10114	18.03
59	423.00	10246	17.46
60	408.47	10275	16.24
61	370.00	8400	16.30
62	370.00	8400	16.30

I HEREBY CERTIFY THAT THE NOTICE OF APPROVAL OF THIS PLAN BY THE LANCASTER ZONING BOARD OF APPEALS WAS RECIEVED AND RECORDED AT THIS OFFICE AND NO APPEAL WAS RECIEVED DURING THE 20 DAYS NEXT AFTER SUCH RECIEPT OF RECORDING OF SAID NOTICE.

TOWN CLERK DATE

APPROVAL UNDER THE SUBDIVISION CONTROL LAW
LANCASTER BOARD OF APPEALS

DATE :

ZONING TABLE
CLASSIFICATION: RESIDENTIAL

SUBDIVISION SCHEDULE:

	REQUIRED	PROPOSED
LOT AREA:	2.0 Acres	8,000 s.f. (Min)
FRONTAGE:	225 Feet	50 Feet (Min)
SETBACKS:		
FRONT:	74 Feet (Arterial) 60 Feet (Collector) 55 Feet (Minor)	20 Feet (Min)
SIDE:	20 Feet	10 Feet (Min)
REAR:	20 Feet	20 Feet (Min)

OWNER REFERENCE:
GLADY C KILBOURN
PO BOX 275
SO LANCASTER, MA

DEED REFERENCE:
REGISTRY OF DEEDS
BOOK 2922, PAGE 341

TOWN OF LANCASTER ASSESSOR'S REFERENCE

MAP 41, LOT 34B

I HEREBY CERTIFY THAT THIS PLAN CONFORMS TO THE RULES AND REGULATIONS OF THE REGISTRY OF DEEDS OF THE COMMONWEALTH OF MASSACHUSETTS.

THIS PLAN WAS PREPARED IN ACCORDANCE WITH THE PROCEDURAL AND TECHNICAL STANDARDS FOR THE PRACTICE OF LAND SURVEYING IN THE COMMONWEALTH OF MASSACHUSETTS.

JOYCE E. HASTINGS , P.L.S. DATE

LOT LAYOUT 3 OF 4

REVISIONS

No.	DATE	DESCRIPTION
1	04/10/18	APARTMENTS 136 UNITS
2	07/06/18	PLAN LAYOUT & DRAINAGE
3	07/25/18	WATER SYSTEM COMMENTS
4	09/18/18	ENGINEERING COMMENTS

SITE DEVELOPMENT PLAN "GOODRIDGE BROOK ESTATES" Multi Unit & Single Family Subdivision Layout LANCASTER, MASSACHUSETTS

PREPARED FOR:
CRESCENT BUILDERS, INC.
94 NORTH MAIN STREET
BOYLSTON MA 01583

GLM Engineering Consultants, Inc.
19 EXCHANGE STREET
HOLLISTON, MA 01746
P: 508-429-1100
F: 508-429-7160
www.GLMengineering.com

DRW.: RST
JOB No. 12,274
DATE: FEBRUARY 8, 2018
SCALE: 1"= 40'
SHEET: 10 of 27
PLAN #: 27,147

FOR REGISTRY OF DEEDS USE ONLY

I HEREBY CERTIFY THAT THE NOTICE OF APPROVAL OF THIS PLAN BY THE LANCASTER ZONING BOARD OF APPEALS WAS RECIEVED AND RECORDED AT THIS OFFICE AND NO APPEAL WAS RECIEVED DURING THE 20 DAYS NEXT AFTER SUCH RECIEPT OF RECORDING OF SAID NOTICE.

TOWN CLERK DATE

APPROVAL UNDER THE SUBDIVISION CONTROL LAW
LANCASTER BOARD OF APPEALS

DATE :

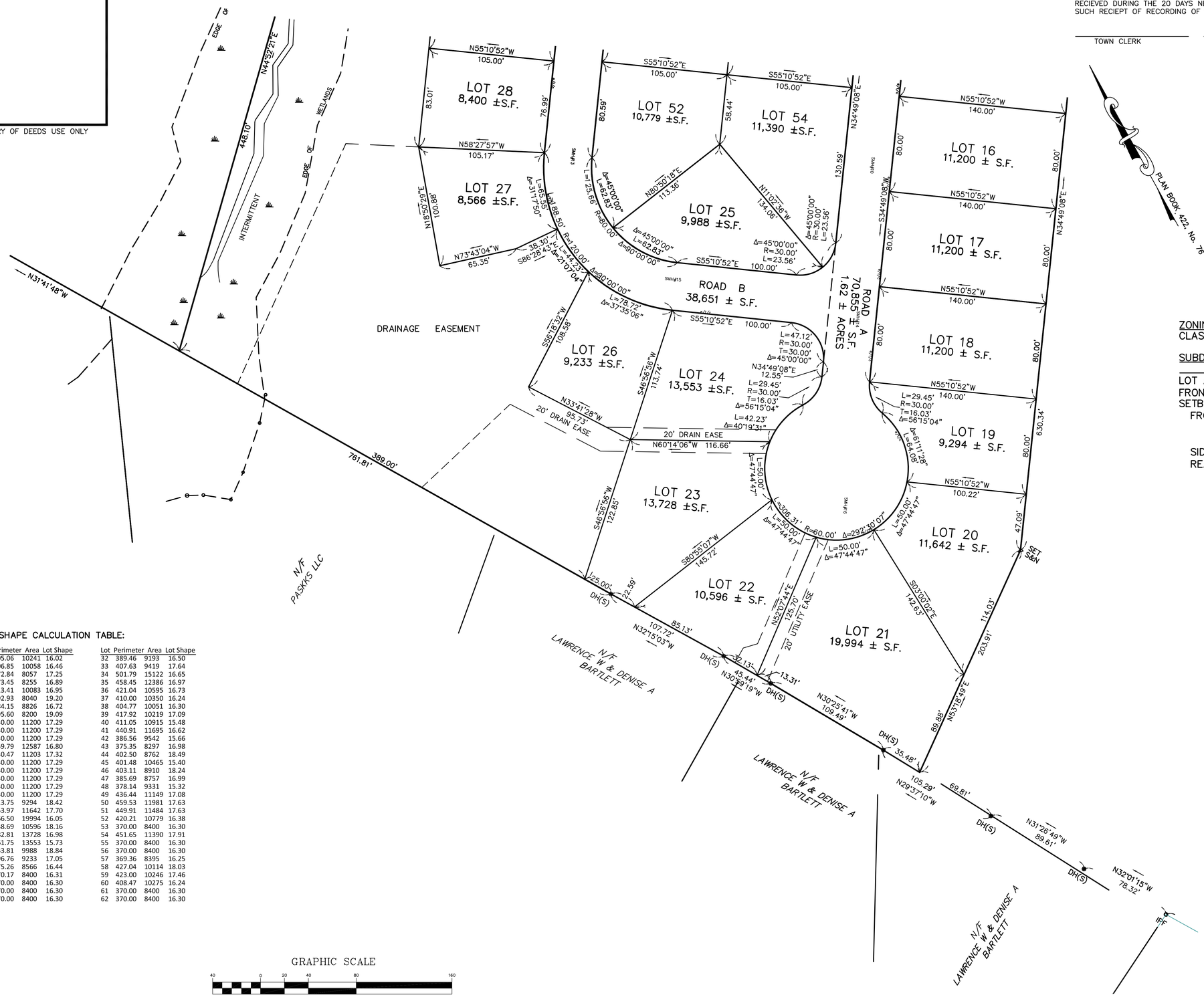

ZONING TABLE
CLASSIFICATION: RESIDENTIAL

SUBDIVISION SCHEDULE:

	REQUIRED	PROPOSED
LOT AREA:	2.0 Acres	8,000 s.f. (Min)
FRONTAGE:	225 Feet	50 Feet (Min)
SETBACKS:		
FRONT:	74 Feet (Arterial)	20 Feet (Min)
	60 Feet (Collector)	
	55 Feet (Minor)	
SIDE:	20 Feet	10 Feet (Min)
REAR:	20 Feet	20 Feet (Min)

LOT SHAPE CALCULATION TABLE:

Lot	Perimeter	Area	Lot Shape	Lot	Perimeter	Area	Lot Shape
1	405.06	10241	16.02	32	389.46	9193	16.50
2	406.85	10058	16.46	33	407.63	9419	17.64
3	372.84	8057	17.25	34	501.79	15122	16.65
4	373.45	8255	16.89	35	458.45	12386	16.97
5	413.41	10083	16.95	36	421.04	10595	16.73
6	392.93	8040	19.20	37	410.00	10350	16.24
7	384.15	8826	16.72	38	404.77	10051	16.30
8	395.60	8200	19.09	39	417.92	10219	17.09
9	440.00	11200	17.29	40	411.05	10915	15.48
10	440.00	11200	17.29	41	440.91	11695	16.62
11	440.00	11200	17.29	42	386.56	9542	15.66
12	459.79	12587	16.80	43	375.35	8297	16.98
13	440.47	11203	17.32	44	402.50	8762	18.49
14	440.00	11200	17.29	45	401.48	10465	15.40
15	440.00	11200	17.29	46	403.11	8910	18.24
16	440.00	11200	17.29	47	385.69	8757	16.99
17	440.00	11200	17.29	48	378.14	9331	15.32
18	440.00	11200	17.29	49	436.44	11149	17.08
19	413.75	9294	18.42	50	459.53	11981	17.63
20	453.97	11642	17.70	51	449.91	11484	17.63
21	566.50	19994	16.05	52	420.21	10779	16.38
22	438.69	10596	18.16	53	370.00	8400	16.30
23	482.81	13728	16.98	54	451.65	11390	17.91
24	461.75	13553	15.73	55	370.00	8400	16.30
25	433.81	9988	18.84	56	370.00	8400	16.30
26	396.76	9233	17.05	57	369.36	8395	16.25
27	375.26	8566	16.44	58	427.04	10114	18.03
28	370.17	8400	16.31	59	423.00	10246	17.46
29	370.00	8400	16.30	60	408.47	10275	16.24
30	370.00	8400	16.30	61	370.00	8400	16.30
31	370.00	8400	16.30	62	370.00	8400	16.30

GRAPHIC SCALE
40 0 20 40 80 160
(IN FEET)
1 inch = 40 ft.

OWNER REFERENCE:
GLADY C KILBOURN
PO BOX 275
SO LANCASTER, MA

DEED REFERENCE:
REGISTRY OF DEEDS
BOOK 2922, PAGE 341

TOWN OF LANCASTER ASSESSOR'S REFERENCE

MAP 41, LOT 34B

I HEREBY CERTIFY THAT THIS PLAN CONFORMS TO THE RULES AND REGULATIONS OF THE REGISTRY OF DEEDS OF THE COMMONWEALTH OF MASSACHUSETTS.

THIS PLAN WAS PREPARED IN ACCORDANCE WITH THE PROCEDURAL AND TECHNICAL STANDARDS FOR THE PRACTICE OF LAND SURVEYING IN THE COMMONWEALTH OF MASSACHUSETTS.

JOYCE E. HASTINGS , P.L.S. DATE

LOT LAYOUT 4 OF 4

REVISIONS

No.	DATE	DESCRIPTION
1	04/10/18	APARTMENTS 136 UNITS
2	07/06/18	PLAN LAYOUT & DRAINAGE
3	07/25/18	WATER SYSTEM COMMENTS
4	09/18/18	ENGINEERING COMMENTS

SITE DEVELOPMENT PLAN
"GOODRIDGE BROOK ESTATES"
Multi Unit & Single Family Subdivision Layout
LANCASTER, MASSACHUSETTS

PREPARED FOR:
CRESCENT BUILDERS, INC.
94 NORTH MAIN STREET
BOYLSTON MA 01583

GLM Engineering Consultants, Inc.
19 EXCHANGE STREET
HOLLISTON, MA 01746
P: 508-429-1100
F: 508-429-7160
www.GLMengineering.com

DRW.: RST
JOB No. 12,274
DATE: FEBRUARY 8, 2018
SCALE: 1"= 40'
SHEET: 11 of 27
PLAN #: 27,147

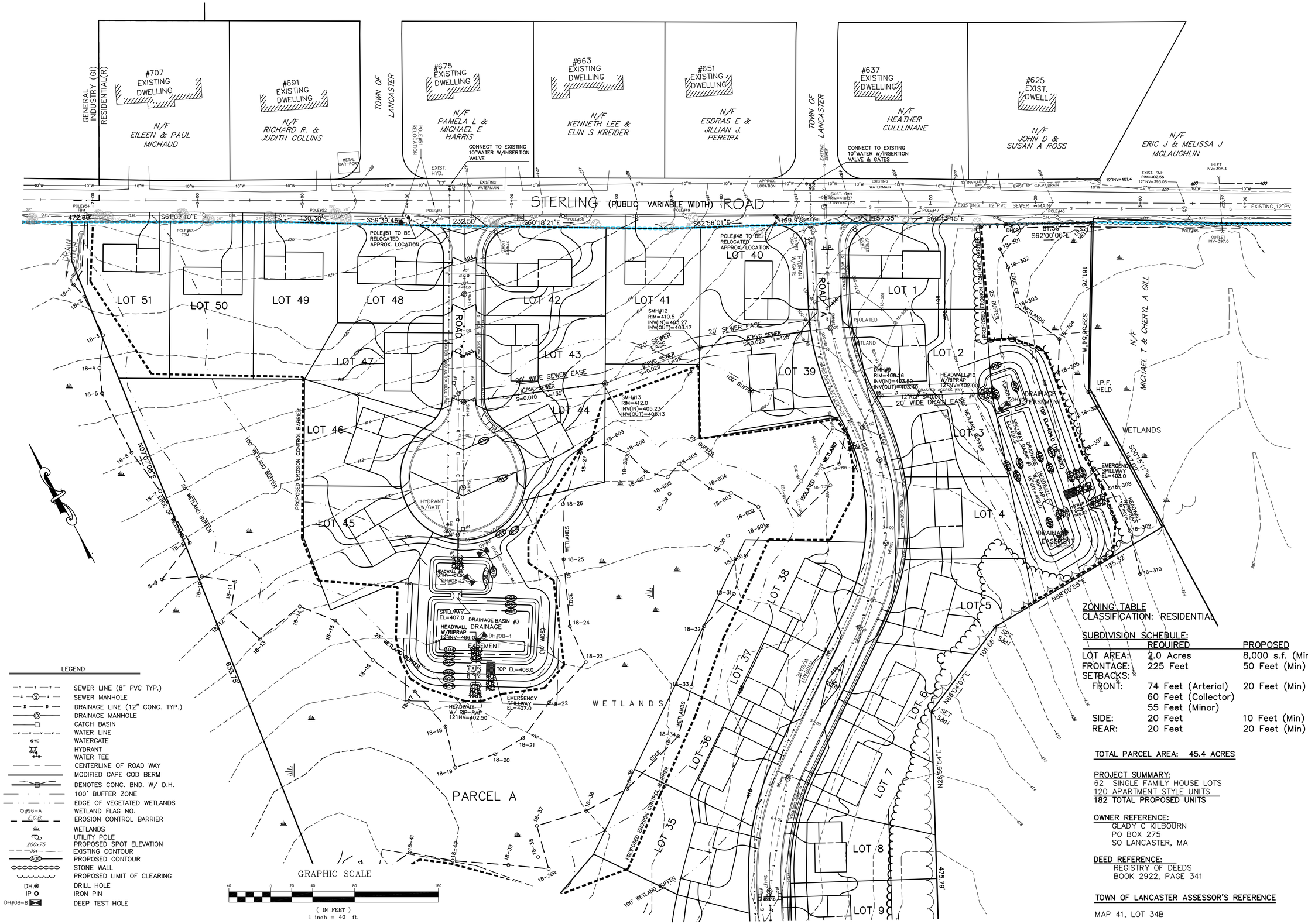

LEGEND

- SEWER LINE (8" PVC TYP.)
- SEWER MANHOLE
- DRAINAGE LINE (12" CONC. TYP.)
- DRAINAGE MANHOLE
- CATCH BASIN
- WATER LINE
- WATERGATE
- HYDRANT
- WATER TEE
- CENTERLINE OF ROAD WAY
- MODIFIED CAPE COD BERM
- DENOTES CONC. BND. W/ D.H.
- 100' BUFFER ZONE
- EDGE OF VEGETATED WETLANDS
- #96-A WETLAND FLAG NO.
- E.C.B. EROSION CONTROL BARRIER
- WETLANDS
- UTILITY POLE
- 200x75 PROPOSED SPOT ELEVATION
- 394 EXISTING CONTOUR
- 400 PROPOSED CONTOUR
- STONE WALL
- PROPOSED LIMIT OF CLEARING
- DH. DRILL HOLE
- IP IRON PIN
- DH#08-8 DEEP TEST HOLE

ZONING TABLE
CLASSIFICATION: RESIDENTIAL

SUBDIVISION SCHEDULE:

	REQUIRED	PROPOSED
LOT AREA:	2.0 Acres	8,000 s.f. (Min)
FRONTAGE:	225 Feet	50 Feet (Min)
SETBACKS:		
FRONT:	74 Feet (Arterial)	20 Feet (Min)
	60 Feet (Collector)	
	55 Feet (Minor)	
SIDE:	20 Feet	10 Feet (Min)
REAR:	20 Feet	20 Feet (Min)

TOTAL PARCEL AREA: 45.4 ACRES

PROJECT SUMMARY:
62 SINGLE FAMILY HOUSE LOTS
120 APARTMENT STYLE UNITS
182 TOTAL PROPOSED UNITS

OWNER REFERENCE:
GLADY C KILBOURN
PO BOX 275
SO LANCASTER, MA

DEED REFERENCE:
REGISTRY OF DEEDS
BOOK 2922, PAGE 341

TOWN OF LANCASTER ASSESSOR'S REFERENCE

MAP 41, LOT 34B

SINGLE FAMILY - LAYOUT & GRADING

REVISIONS

No.	DATE	DESCRIPTION
1	04/10/18	APARTMENTS 136 UNITS
2	07/06/18	PLAN LAYOUT & DRAINAGE
3	07/25/18	WATER SYSTEM COMMENTS
4	09/18/18	ENGINEERING COMMENTS

SITE DEVELOPMENT PLAN "GOODRIDGE BROOK ESTATES" Multi Unit & Single Family Subdivision Layout LANCASTER, MASSACHUSETTS

PREPARED FOR:
CRESCENT BUILDERS, INC.
94 NORTH MAIN STREET
BOYLSTON MA 01583

GLM Engineering Consultants, Inc.
19 EXCHANGE STREET
HOLLISTON, MA 01746
P:508-429-1100
F:508-429-7160
www.GLMengineering.com

DRW.: RST
JOB No. 12,274
DATE: FEBRUARY 8, 2018
SCALE: 1"= 40'
SHEET: 12 of 27
PLAN #: 27,147

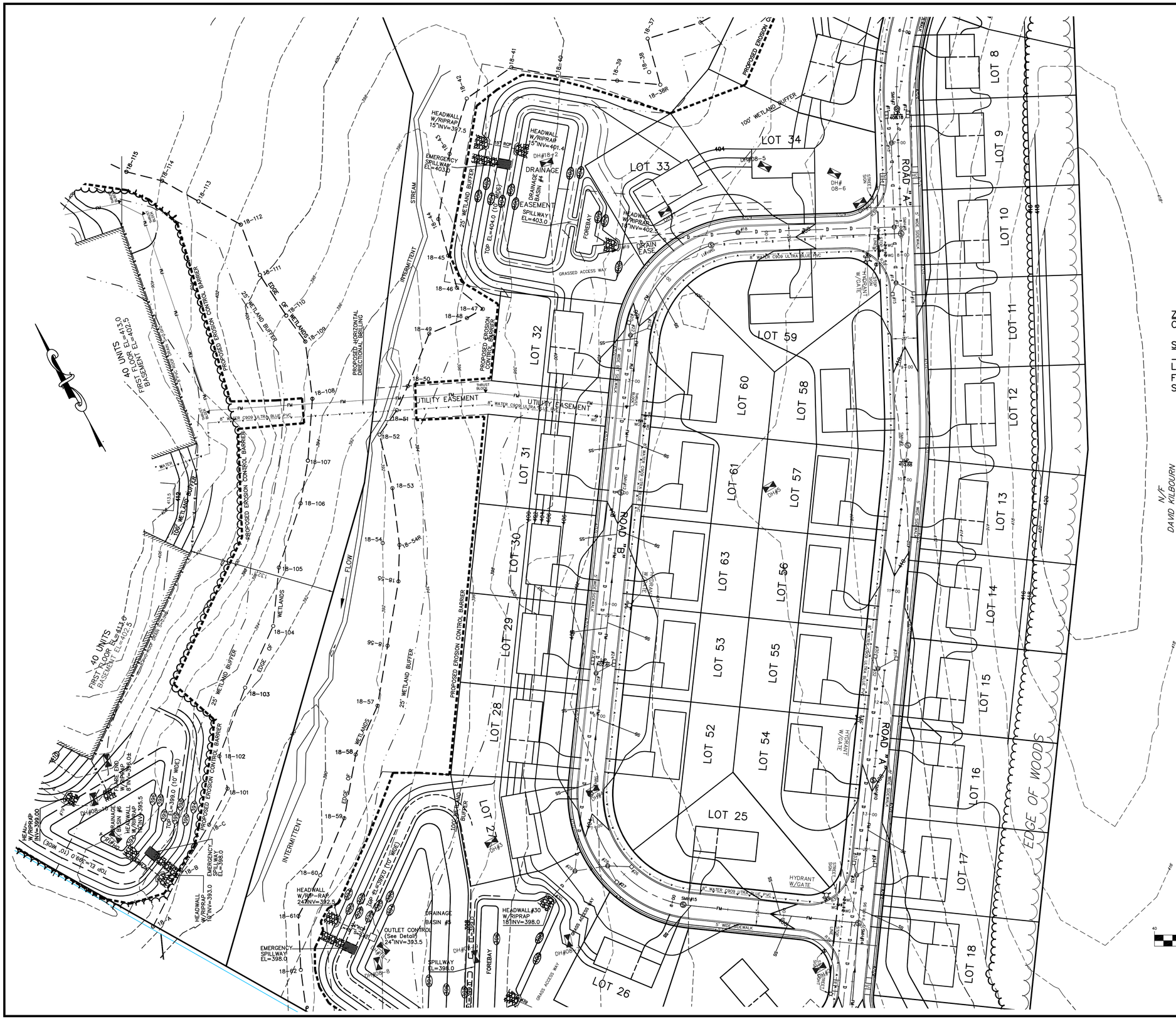

TOTAL PARCEL AREA: 45.4 ACRES

PROJECT SUMMARY:
62 SINGLE FAMILY HOUSE LOTS
120 APARTMENT STYLE UNITS
182 TOTAL PROPOSED UNITS

OWNER REFERENCE:
GLADY C KILBOURN
PO BOX 275
SO LANCASTER, MA

DEED REFERENCE:
REGISTRY OF DEEDS
BOOK 2922, PAGE 341

TOWN OF LANCASTER ASSESSOR'S REFERENCE

MAP 41, LOT 34B

PLAN REFERENCE:
WORCESTER COUNTY REGISTRY
1) PLAN BOOK 466, PLAN No. 69
2) PLAN BOOK 422, PLAN No. 76
3) PLAN BOOK 539, PLAN No. 80
4) PLAN BOOK 763, PLAN No. 63

ZONING TABLE
CLASSIFICATION: RESIDENTIAL

SUBDIVISION SCHEDULE:

	REQUIRED	PROPOSED
LOT AREA:	2.0 Acres	8,000 s.f. (Min)
FRONTAGE:	225 Feet	50 Feet (Min)
SETBACKS:		
FRONT:	74 Feet (Arterial)	20 Feet (Min)
	60 Feet (Collector)	
	55 Feet (Minor)	
SIDE:	20 Feet	10 Feet (Min)
REAR:	20 Feet	20 Feet (Min)

LEGEND

- SEWER LINE (8" PVC TYP.)
- SEWER MANHOLE
- DRAINAGE LINE (12" CONC. TYP.)
- DRAINAGE MANHOLE
- CATCH BASIN
- WATER LINE
- WATERGATE
- HYDRANT
- WATER TEE
- CENTERLINE OF ROAD WAY
- MODIFIED CAPE COD BERM
- DENOTES CONC. BND. W/ D.H.
- 100' BUFFER ZONE
- EDGE OF VEGETATED WETLANDS
- WETLAND FLAG NO.
- EROSION CONTROL BARRIER
- WETLANDS
- UTILITY POLE
- PROPOSED SPOT ELEVATION
- EXISTING CONTOUR
- PROPOSED CONTOUR
- STONE WALL
- PROPOSED LIMIT OF CLEARING
- DRILL HOLE
- IRON PIN
- DEEP TEST HOLE

GRAPHIC SCALE
(IN FEET)
1 inch = 40 ft.

SINGLE FAMILY - LAYOUT & GRADING

REVISIONS		
No.	DATE	DESCRIPTION
1	04/10/18	APARTMENTS 136 UNITS
2	07/06/18	PLAN LAYOUT & DRAINAGE
3	07/25/18	WATER SYSTEM COMMENTS
4	09/18/18	ENGINEERING COMMENTS

SITE DEVELOPMENT PLAN
"GOODRIDGE BROOK ESTATES"
Multi Unit & Single Family Subdivision Layout
LANCASTER, MASSACHUSETTS

PREPARED FOR:
CRESCENT BUILDERS, INC.
94 NORTH MAIN STREET
BOYLSTON MA 01583

GLM Engineering Consultants, Inc.
19 EXCHANGE STREET
HOLLISTON, MA 01746
P:508-429-1100
F:508-429-7160
www.GLMengineering.com

DRW.: RST	
JOB No.	12,274
DATE: FEBRUARY 8, 2018	
SCALE:	1"= 40'
SHEET:	13 of 27
PLAN #:	27,147

TOTAL PARCEL AREA: 45.4 ACRES

PROJECT SUMMARY:
62 SINGLE FAMILY HOUSE LOTS
120 APARTMENT STYLE UNITS
182 TOTAL PROPOSED UNITS

OWNER REFERENCE:
GLADY C KILBOURN
PO BOX 275
SO LANCASTER, MA

DEED REFERENCE:
REGISTRY OF DEEDS
BOOK 2922, PAGE 341

TOWN OF LANCASTER ASSESSOR'S REFERENCE

MAP 41, LOT 34B

PLAN REFERENCE:
WORCESTER COUNTY REGISTRY
1) PLAN BOOK 466, PLAN No. 69
2) PLAN BOOK 422, PLAN No. 76
3) PLAN BOOK 539, PLAN No. 80
4) PLAN BOOK 763, PLAN No. 63

LEGEND

—S—S—	SEWER LINE (8" PVC TYP.)
—S—(S)—S—	SEWER MANHOLE
—D—D—	DRAINAGE LINE (12" CONC. TYP.)
—(D)—	DRAINAGE MANHOLE
—□—	CATCH BASIN
—V—V—V—	WATER LINE
WG	WATERGATE
	HYDRANT
	WATER TEE
— — —	CENTERLINE OF ROAD WAY
	MODIFIED CAPE COD BERM
	DENOTES CONC. BND. W/ D.H.
— · · —	100' BUFFER ZONE
— · · —	EDGE OF VEGETATED WETLANDS
O #96-A	WETLAND FLAG NO.
E.C.B.	EROSION CONTROL BARRIER
	WETLANDS
	UTILITY POLE
200x75	PROPOSED SPOT ELEVATION
—394—	EXISTING CONTOUR
400	PROPOSED CONTOUR
	STONE WALL
	PROPOSED LIMIT OF CLEARING
DH.	DRILL HOLE
IP	IRON PIN
DH#08-8	DEEP TEST HOLE

GRAPHIC SCALE

40 0 20 40 80 160

(IN FEET)
1 inch = 40 ft.

SINGLE FAMILY - LAYOUT & GRADING

REVISIONS

No.	DATE	DESCRIPTION
1	04/10/18	APARTMENTS 136 UNITS
2	07/06/18	PLAN LAYOUT & DRAINAGE
3	07/25/18	WATER SYSTEM COMMENTS
4	09/18/18	ENGINEERING COMMENTS

SITE DEVELOPMENT PLAN
"GOODRIDGE BROOK ESTATES"
Multi Unit & Single Family Subdivision Layout
LANCASTER, MASSACHUSETTS

PREPARED FOR:
CRESCENT BUILDERS, INC.
94 NORTH MAIN STREET
BOYLSTON MA 01583

GLM Engineering Consultants, Inc.
19 EXCHANGE STREET
HOLLISTON, MA 01746
P: 508-429-1100
F: 508-429-7160
www.GLMengineering.com

DRW.: RST
JOB No. 12,274
DATE: FEBRUARY 8, 2018
SCALE: 1"= 40'
SHEET: 14 of 27
PLAN #: 27,147

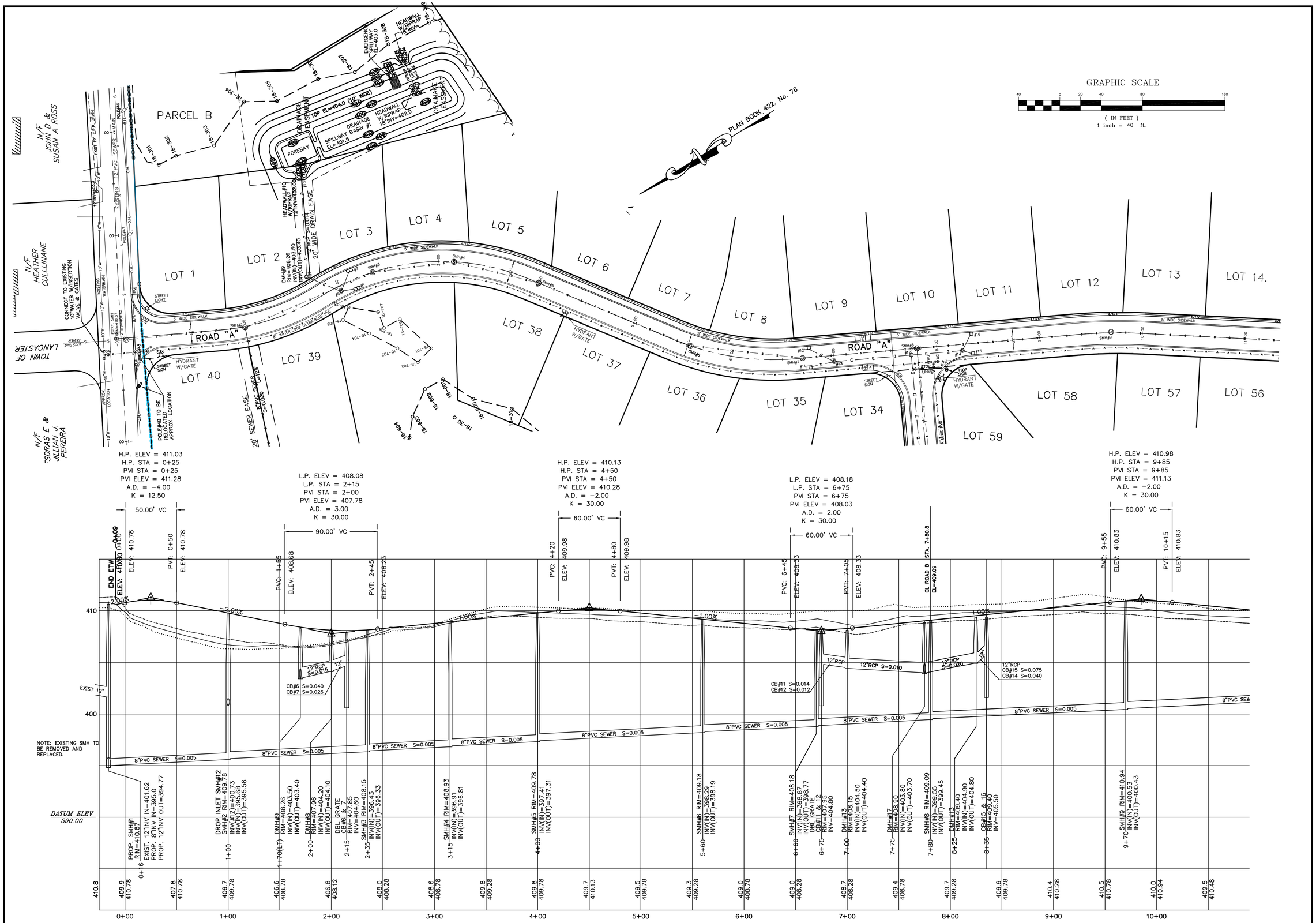

SINGLE FAMILY - PLAN & PROFILE ROAD A

REVISIONS		
No.	DATE	DESCRIPTION
1	04/10/18	APARTMENTS 136 UNITS
2	07/06/18	PLAN LAYOUT & DRAINAGE
3	07/25/18	WATER SYSTEM COMMENTS
4	09/18/18	ENGINEERING COMMENTS

SITE DEVELOPMENT PLAN "GOODRIDGE BROOK ESTATES" Multi Unit & Single Family Subdivision Layout LANCASTER, MASSACHUSETTS

PREPARED FOR:
CRESCENT BUILDERS, INC.
94 NORTH MAIN STREET
BOYLSTON MA 01583

GLM Engineering Consultants, Inc.
19 EXCHANGE STREET
HOLLISTON, MA 01746
P: 508-429-1100
F: 508-429-7160
www.GLMengineering.com

DRW.: RST	
JOB No.	12,274
DATE: FEBRUARY 8, 2018	
SCALE:	1"= 40'
SHEET:	15 of 27
PLAN #:	27,147

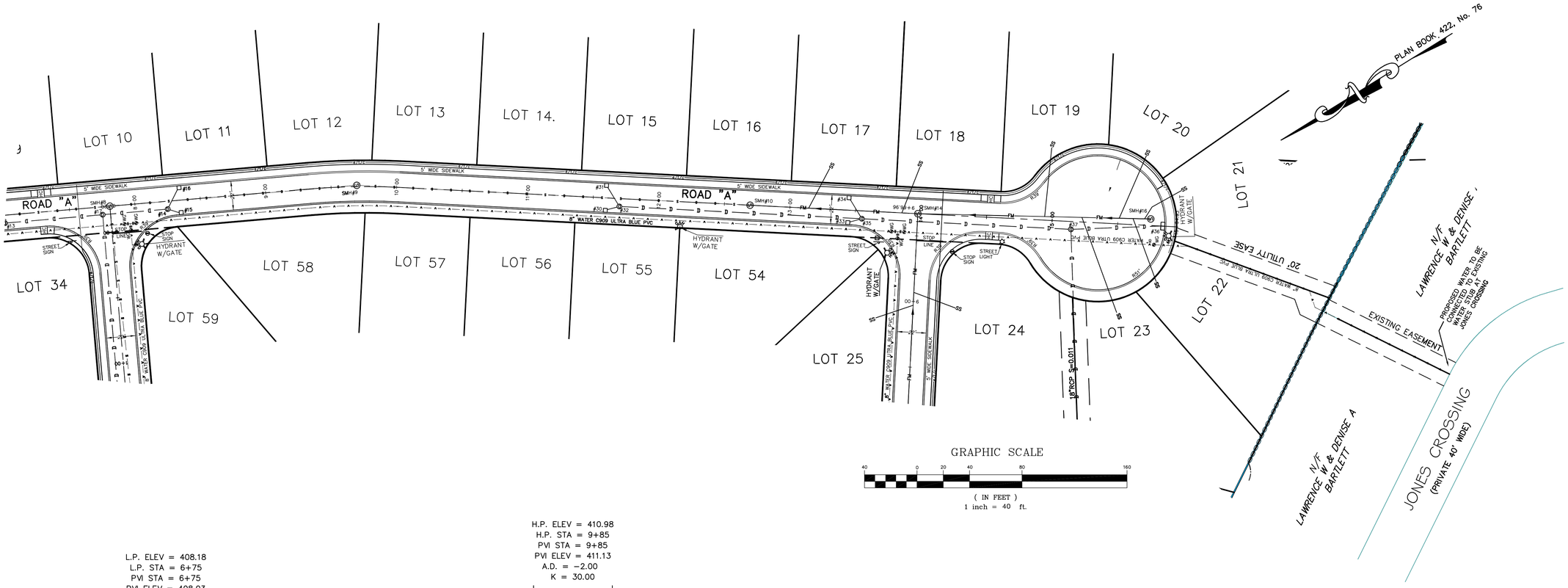

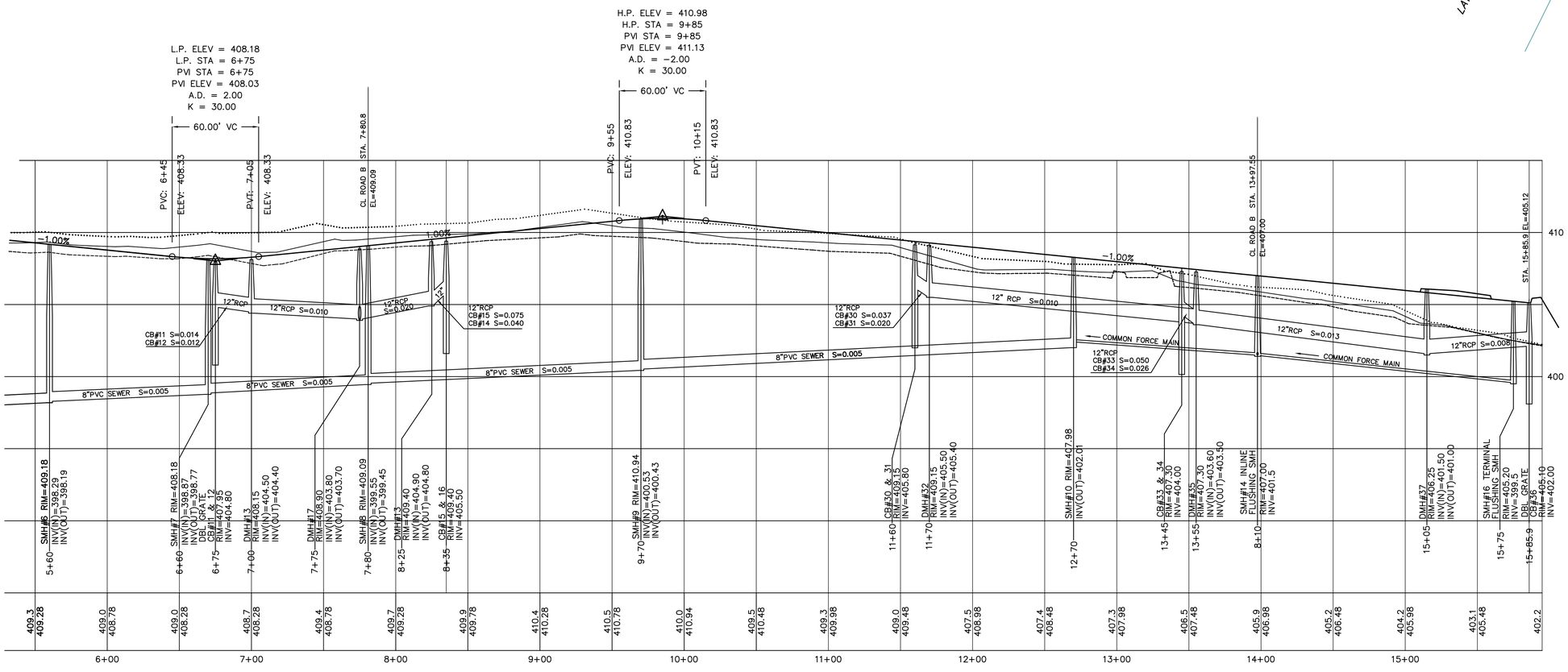

SCALE: Horiz: 1"=40'; Vert: 1"=4'

SINGLE FAMILY - PLAN & PROFILE ROAD A

REVISIONS

No.	DATE	DESCRIPTION
1	04/10/18	APARTMENTS 136 UNITS
2	07/06/18	PLAN LAYOUT & DRAINAGE
3	07/25/18	WATER SYSTEM COMMENTS
4	09/18/18	ENGINEERING COMMENTS

SITE DEVELOPMENT PLAN
"GOODRIDGE BROOK ESTATES"
Multi Unit & Single Family Subdivision Layout
LANCASTER, MASSACHUSETTS

PREPARED FOR:
CRESCENT BUILDERS, INC.
94 NORTH MAIN STREET
BOYLSTON MA 01583

GLM Engineering Consultants, Inc.
19 EXCHANGE STREET
HOLLISTON, MA 01746
P: 508-429-1100
F: 508-429-7160
www.GLMengineering.com

DRW.: RST

JOB No. 12,274

DATE: FEBRUARY 8, 2018

SCALE: 1"= 40'

SHEET: 16 of 27

PLAN #: 27,147

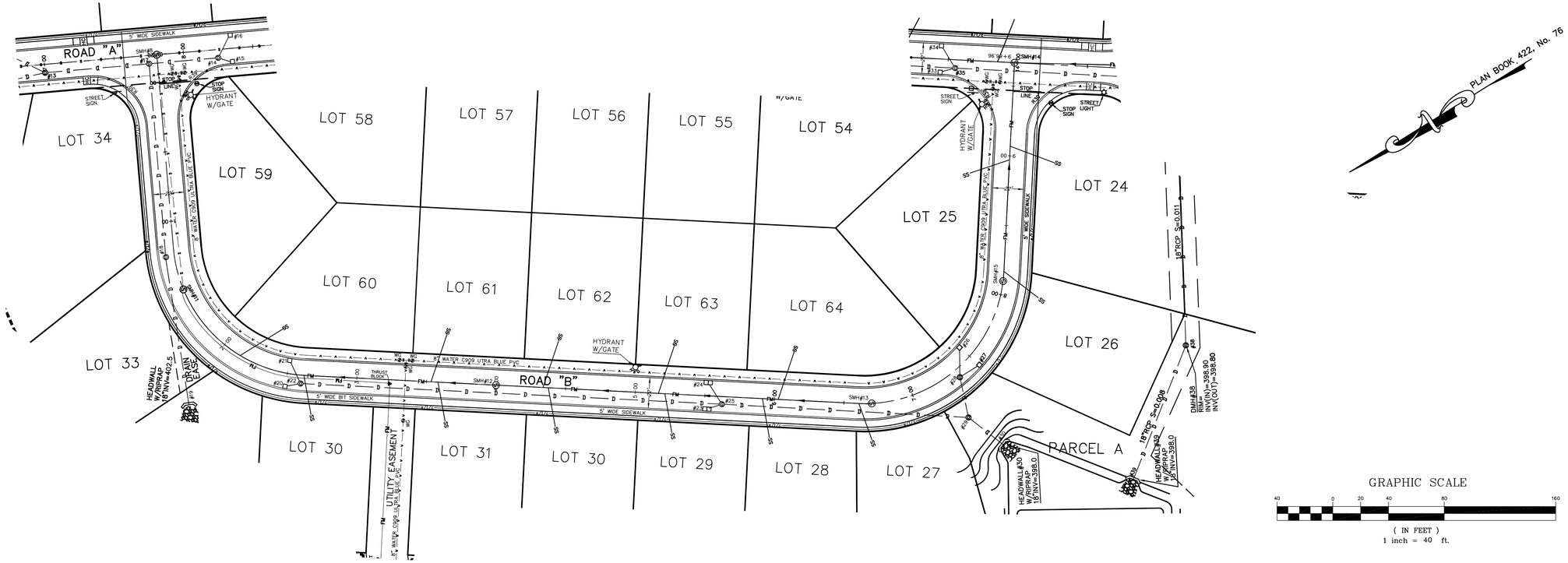

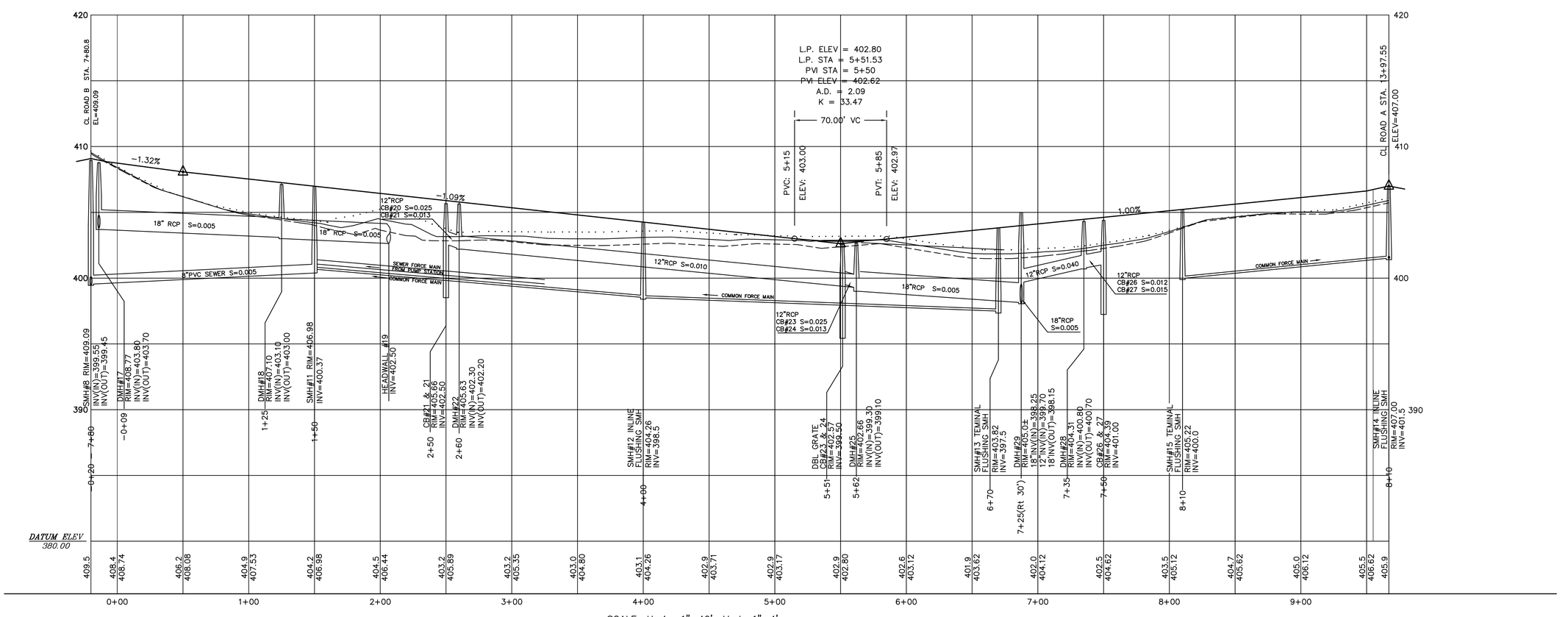

SINGLE FAMILY - PLAN & PROFILE ROAD B

REVISIONS		
No.	DATE	DESCRIPTION
1	04/10/18	APARTMENTS 136 UNITS
2	07/06/18	PLAN LAYOUT & DRAINAGE
3	07/25/18	WATER SYSTEM COMMENTS
4	09/18/18	ENGINEERING COMMENTS

SITE DEVELOPMENT PLAN "GOODRIDGE BROOK ESTATES" Multi Unit & Single Family Subdivision Layout LANCASTER, MASSACHUSETTS

PREPARED FOR:
CRESCENT BUILDERS, INC.
94 NORTH MAIN STREET
BOYLSTON MA 01583

GLM Engineering Consultants, Inc.
19 EXCHANGE STREET
HOLLISTON, MA 01746
P: 508-429-1100
F: 508-429-7160
www.GLMengineering.com

DRW.: RST
JOB No. 12,274
DATE: FEBRUARY 8, 2018
SCALE: 1"= 40'
SHEET: 17 of 27
PLAN #: 27,147

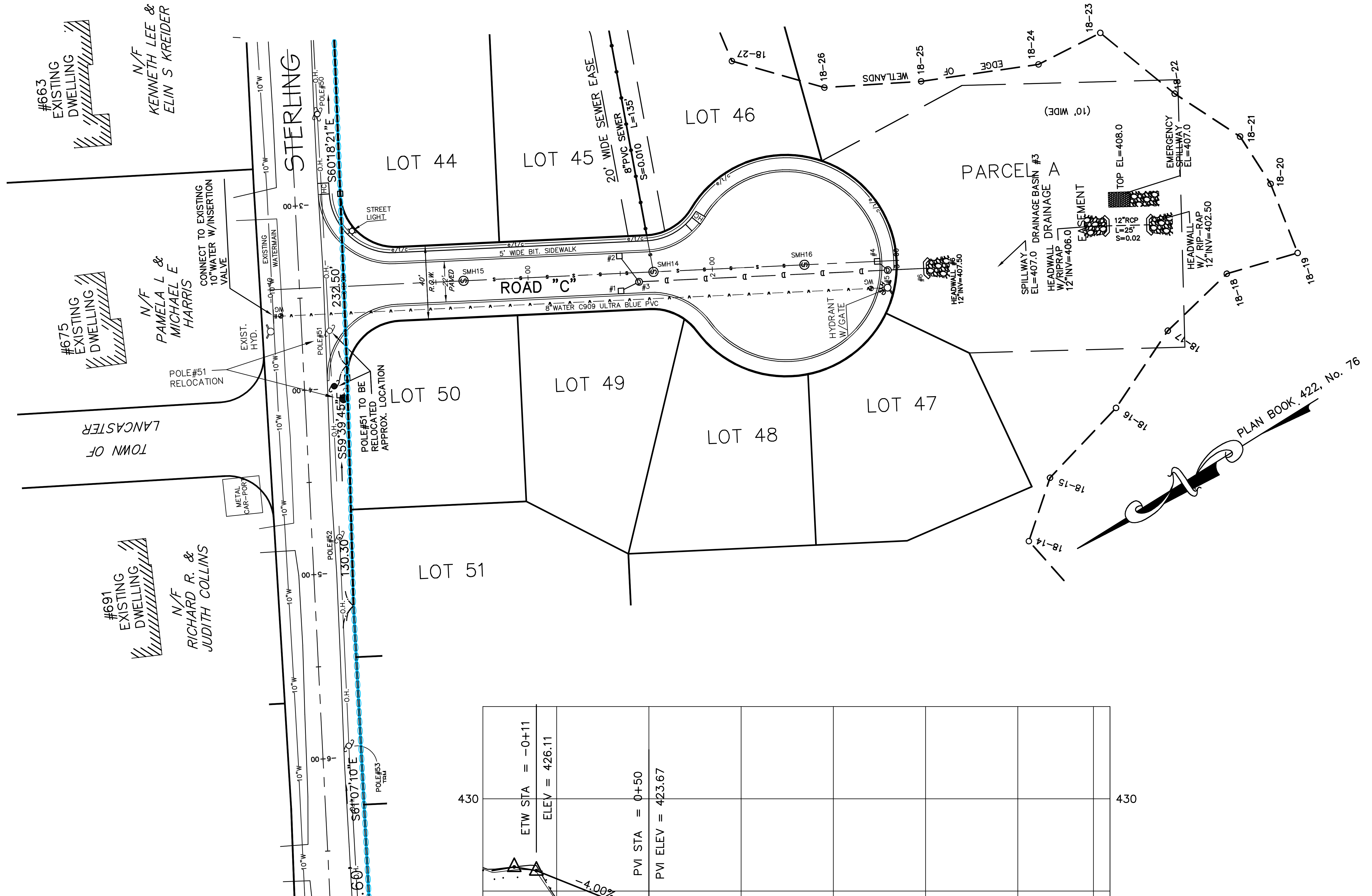

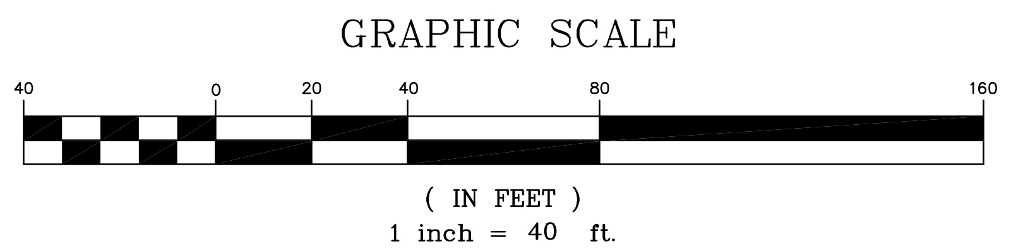

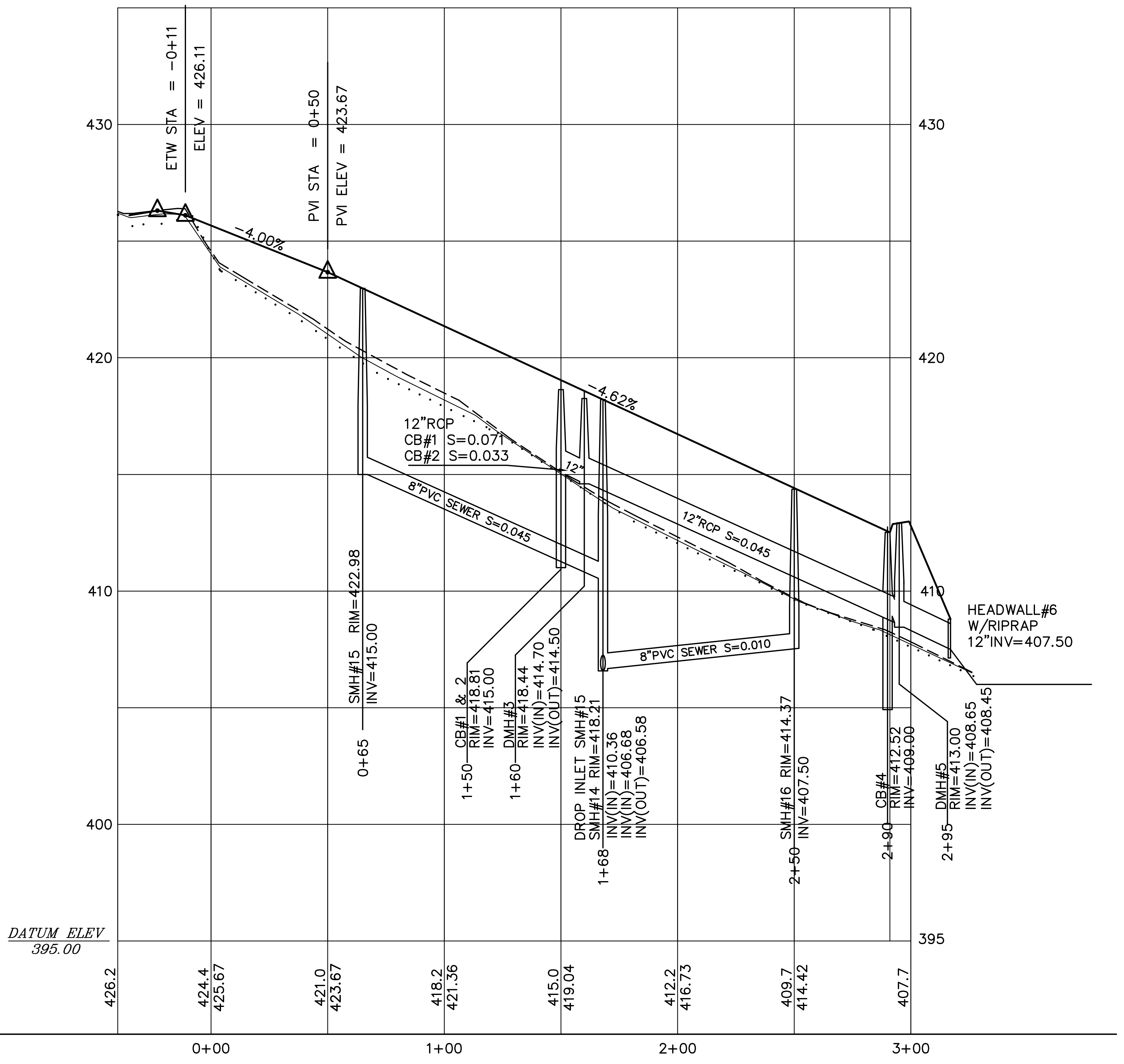

SCALE: Horiz: 1"=40'; Vert: 1"=4'

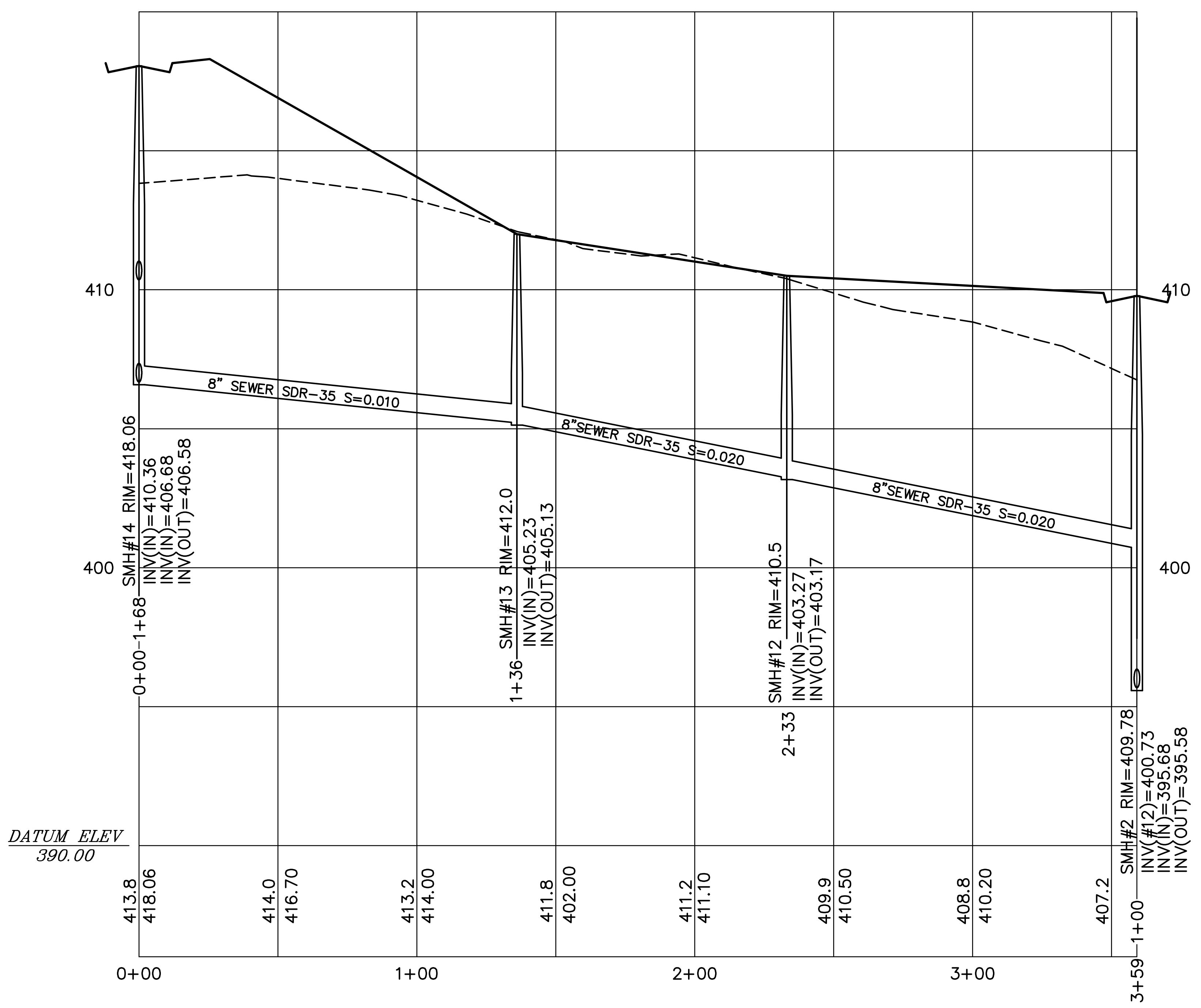

SEWER PROFILE

SCALE: Horiz: 1"=40'; Vert: 1"=4'

SINGLE FAMILY - PLAN & PROFILE ROAD C

REVISIONS

No.	DATE	DESCRIPTION
1	04/10/18	APARTMENTS 136 UNITS
2	07/06/18	PLAN LAYOUT & DRAINAGE
3	07/25/18	WATER SYSTEM COMMENTS
4	09/18/18	ENGINEERING COMMENTS

SITE DEVELOPMENT PLAN
"GOODRIDGE BROOK ESTATES"
Multi Unit & Single Family Subdivision Layout
LANCASTER, MASSACHUSETTS

PREPARED FOR:
CRESCENT BUILDERS, INC.
94 NORTH MAIN STREET
BOYLSTON MA 01583

GLM Engineering Consultants, Inc.
19 EXCHANGE STREET
HOLLISTON, MA 01746
P: 508-429-1100
F: 508-429-7160
www.GLMengineering.com

DRW.: RST
JOB No. 12,274
DATE: FEBRUARY 8, 2018
SCALE: 1"= 40'
SHEET: 18 of 27
PLAN #: 27,147

NOTE:
THE EXISTING HOUSES ARE TO BE RECONNECTED THE NEW SEWER LINE DURING CONSTRUCTION. THE CONTRACTOR SHALL MAKE ALL PROVISIONS TO INSURE NO LOSS OF SERVICE DURING CONSTRUCTION.

NOTE:
STERLING ROAD TO BE CONSTRUCTION TO BE COORDINATE WITH THE DEPARTMENT OF PUBLIC WORKS.
– RECOMMEND PATCH ALL TRENCH WORK.
– GRIND ROADWAY SURFACE 1½" DEPTH FOR FULL LENGTH OF CONSTRUCTION AND RESURFACE WITH 1½" TOP COARSE.

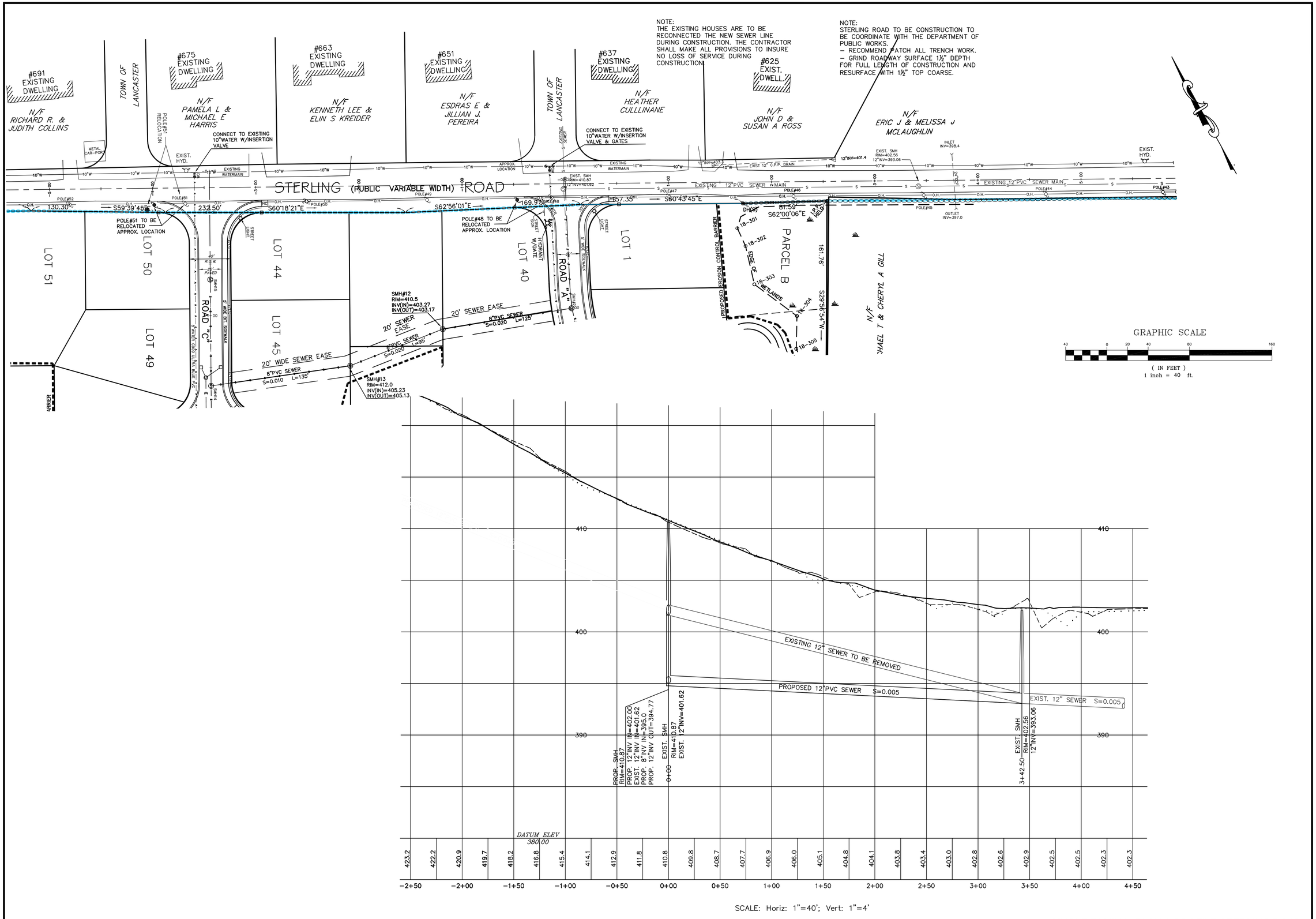

SINGLE FAMILY - PLAN & PROFILE STERLING ROAD

REVISIONS		
No.	DATE	DESCRIPTION
1	04/10/18	APARTMENTS 136 UNITS
2	07/06/18	PLAN LAYOUT & DRAINAGE
3	07/25/18	WATER SYSTEM COMMENTS
4	09/18/18	ENGINEERING COMMENTS

SITE DEVELOPMENT PLAN
"GOODRIDGE BROOK ESTATES"
Multi Unit & Single Family Subdivision Layout
LANCASTER, MASSACHUSETTS

PREPARED FOR:
CRESCENT BUILDERS, INC.
94 NORTH MAIN STREET
BOYLSTON MA 01583

GLM Engineering Consultants, Inc.
19 EXCHANGE STREET
HOLLISTON, MA 01746
P: 508-429-1100
F: 508-429-7160
www.GLMengineering.com

DRW.: RST
JOB No. 12,274
DATE: FEBRUARY 8, 2018
SCALE: 1"= 40'
SHEET: 19 of 27
PLAN #: 27,147

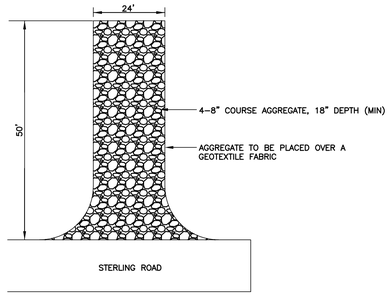

TRAP ROCK APRON
CONSTRUCTION ENTRANCE
NOT TO SCALE

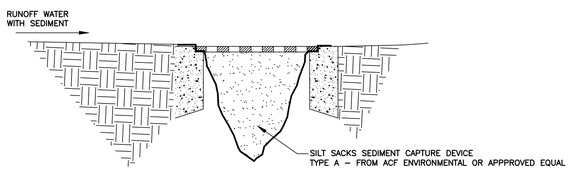

SILT SACK CATCH BASIN INLET
NOT TO SCALE

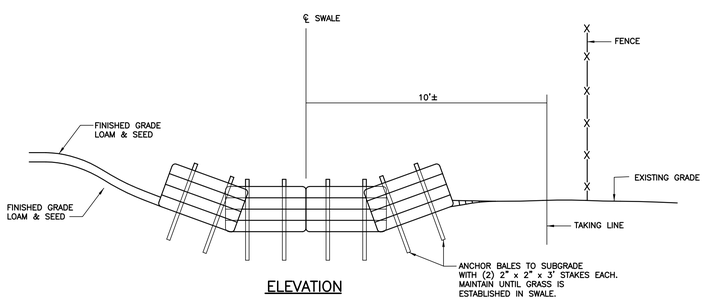

ELEVATION

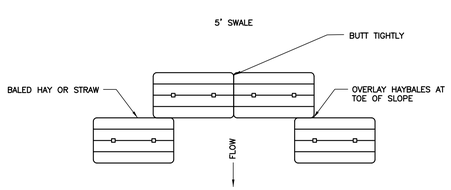

PLAN

SEDIMENT CHECK DAM DETAIL
N.T.S.

EROSION CONTROL MAINTENANCE:

THE CONTRACTOR SHALL HAVE ON THE SITE, AN ADEQUATE QUANITY OF SUPPLEMENTAL FILTER MITT AND STAKES TO BE USED FOR CONTROL OF EMERGENCY EROSION PROBLEMS. ALL EROSION CONTROL MEASURES SHALL BE INSPECTED WEEKLY AND AFTER A STORM EVENT OF 1" INCH OR GREATER.

DEWATERING:

PUMPING AND DEWATERING SHALL BE DONE IN A MANNER WHICH WILL NOT DISCHARGE ANY SILT AND SEDIMENT INTO A RESOURCE AREA. DISCHARGES FROM A DEWATERING CONSTRUCTION PROCEDURE WILL BE FILTERED THROUGH A SILTATION BASIN CONSTRUCTED UPLAND FROM THE WORK SITE. THE SILTATION BASIN SHALL BE A DEPRESSION SURROUNDED BY A HAYBALE DIKE OR SILT FENCE. OVERFLOW FROM THE BASIN SHALL BE PLANNED TO BE LOCATED OVER THICKLY AND NATURALLY MULCHED UPLAND AREA. ALL BASINS SHALL BE LOCATED AT LEAST 100 FEET UPSLOPE FROM ANY WETLAND RESOURCE AREA.

STOCKPILING:

ALL STOCKPILES AREAS SHALL BE SECURED AROUND THE PERIMETER WITH FILTER MITT BARRIER.

EROSION AND SEDIMENTATION CONTROL:

1. PRIOR TO ANY DISTURBANCE OR ALTERATIONS ON ANY AREA ON THE SITE. THE FILTER MITT SEDIMENT BARRIER SHALL BE INSTALLED IN THE LOCATIONS SHOWN ON THE SITE PLAN.

2. BARRIERS SHALL BE CONSTRUCTED AS SHOWN ON THE FILTER MITT DETAIL WITH CONSTRUCTION FENCE DETAIL ABOVE.

3. ONCE INSTALLED, THE FILTER MITT SEDIMENT BARRIERS SHALL BE MAINTAINED IN PLACE UNTIL ALL AREAS UPGRADIENT FROM THE BARRIERS HAVE BEEN STABILIZED AS SPECIFIED HEREIN. UPON COMPLETION AND STABILIZATION OF THE PROJECT, THE FILTER MITT AND FENCE SHALL BE REMOVED.

4. THE SILT FENCE IS INTENDED TO ACT AS A LIMIT OF DISTURBANCE. ANY LAND DOWN GRADIENT FROM THE FENCE ACCIDENTALLY DISTURBED SHALL BE IMMEDIATELY REPAIRED AND RESTORED TO ORIGINAL CONDITION.

5. EROSION CONTROL MEASURES SHALL BE MONITORED ON A DAILY BASIS, OR AS NEEDED, AND BE REINFORCED, REPAIRED, OR REPLACED WHEN NEEDED, PER JUDGEMENT OF THE SITE FOREMAN AND/OR TOWN OF LANCASTER REPRESENTATIVE.

6. TEMPORARY VEGETATION COVER SHALL BE ESTABLISHED ON ALL DISTURBED AREAS WHERE CONSTRUCTION ACTIVITIES TEMPORARILY CEASE FOR AT LEAST 30 DAYS. AREAS SHALL BE STABILIZED WITH TEMPORARY SEED. IF THE SEASON PREVENTS THE ESTABLISHMENT OF A VEGETATIVE COVER, DISTURBED AREAS SHALL BE MULCHED AND THEN SEEDED WHEN WEATHER CONDITIONS ALLOW.

7. THE FIRST ONE–HUNDRED (100) FEET OF THE PROPOSED DRIVEWAY ENTRANCE AT STERLING ROAD SHALL BE COVERED WITH TWELVE (12) INCHES OF 4 – 8 INCH CRUSHED STONE TO STABILIZE THE AREA.

8. WATER SPRAYING SHALL BE UTILIZED ON ALL DISTURBED AREAS DURING DRY WEATHER TO PREVENT DUST. A WATER TRUCK SHALL BE KEPT ON SITE AT ALL TIMES DURING THE DURING THE SUMMER MONTHS OF CONSTRUCTION.

9. FOLLOWING CONSTRUCTION OF THE CATCH BASIN STRUCTURES, A SILT SACK SHALL BE PLACE IN EACH STRUCTURE TO PREVENT SEDIMENT FROM ENTERING THE DRAINAGE SYSTEM. (SEE DETAIL)

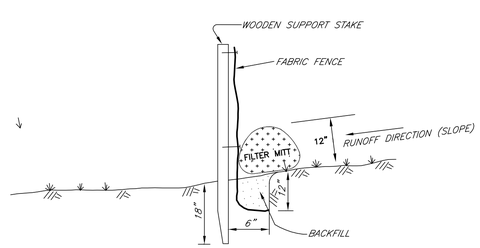

EROSION CONTROL BARRIER
WITH FILTER MITT
TO BE USED IN AREAS WITHIN 25' OF WETLAND DELINEATION

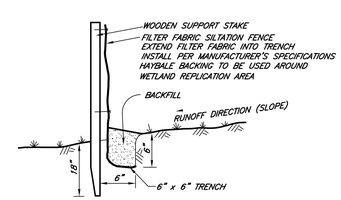

EROSION CONTROL BARRIER
WITHOUT FILTER MITT
TO BE USED IN AREAS OUTSIDE OF 25'

EROSION CONTROL DETAILS

REVISIONS

No.	DATE	DESCRIPTION
1	04/10/18	APARTMENTS 136 UNITS
2	07/06/18	PLAN LAYOUT & DRAINAGE
3	07/25/18	WATER SYSTEM COMMENTS
4	09/18/18	ENGINEERING COMMENTS

SITE DEVELOPMENT PLAN
"GOODRIDGE BROOK ESTATES"
Multi Unit & Single Family Subdivision Layout
LANCASTER, MASSACHUSETTS

PREPARED FOR:
CRESCENT BUILDERS, INC.
94 NORTH MAIN STREET
BOYLSTON MA 01583

GLM Engineering Consultants, Inc.
19 EXCHANGE STREET
HOLLISTON, MA 01746
P: 508–429–1100
F: 508–429–7160
www.GLMengineering.com

DRW.: RST
JOB No. 12,274
DATE: FEBRUARY 8, 2018
SCALE: nts
SHEET: 20 of 27
PLAN #: 27,147

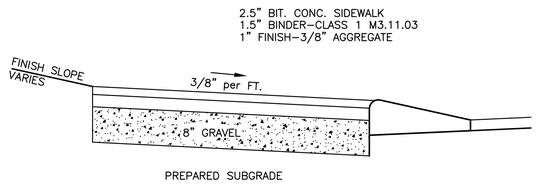

BITUMINOUS SIDEWALK DETAIL

NOT TO SCALE:

NOTES:
1. FILL MATERIAL IF REQUIRED, SHALL MEET THE SPECIFICTIONS OF MSSHB M1.01.0, ORDINARY BORROW.
2. GRAVEL SURFACE FOR ROADWAYS AND SIDEWALKS SHALL BE MSSHB M.1.03.0, TYPE B.
3. SIEVE TEST RESULTS SHALL BE SUBMITTED TO THE TOWN OF STERLING REPRENTATIVE FOR THE GRAVEL.
4. COMPACTION TEST MUST BE CONDUCTED AND RESULTS SUBMITTED FOR THE SUBBASE AND GRAVEL.
5. NO PAVING IS ALLOWED BETWEEN NOVEMBER 1 AND APRIL 15.
6. ALL PAVEMENT SHALL MEET MSSHB M3.11.03, SIMILAR TO THE SIDEWALK SPECIFICATIONS.

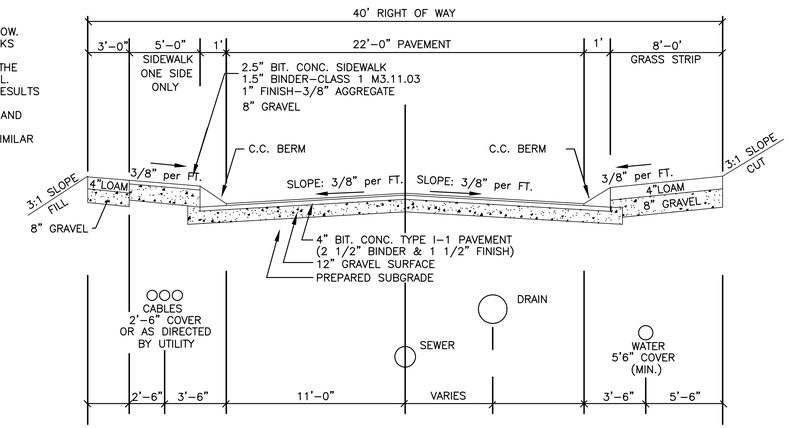

TYPICAL RIGHT OF WAY CROSS SECTION

LANCASTER, MASS.

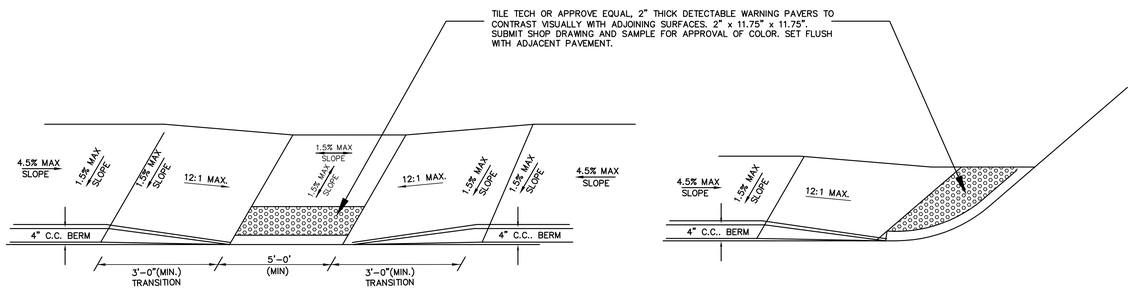

NOTES:
1. THE DIMENSIONS SHOWN AT ROADWAY EDGE AREA FIXED DISTANCE.
2. RAMP CROSS SECTION TO BE THE SAME AS ADJACENT SIDEWALK
3. BITUMINOUS PAVED RAMPS ARE TO BE PROVIDED.
4. IN NO CASE ARE THE RAMPS TO BE PLACED BEHIND THE STOP LINE.
5. THE DIMENSIONS ARE SUBJECT TO CHANGE IN THE FIELD IN EXISTING APPURTENANCES OR CONDITIONS WILL MAKE THE RAMP LOCATIONS IMPRACTICAL OR UNSAFE. CONSULT CIVIL ENGINEER PRIOR TO MAKING ANY MODIFICATIONS.

HANDICAP SIDEWALK CURB CUT DETAIL

NOT TO SCALE

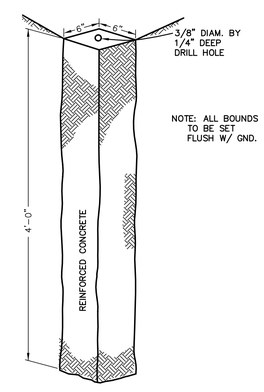

CONCRETE BOUND DETAIL

NOT TO SCALE:

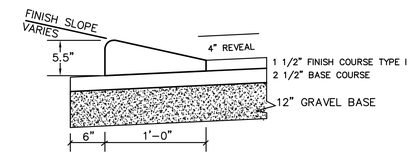

CAPE COD BERM DETAIL

NOT TO SCALE:

DETAILS

REVISIONS

No.	DATE	DESCRIPTION
1	04/10/18	APARTMENTS 136 UNITS
2	07/06/18	PLAN LAYOUT & DRAINAGE
3	07/25/18	WATER SYSTEM COMMENTS
4	09/18/18	ENGINEERING COMMENTS

SITE DEVELOPMENT PLAN
"GOODRIDGE BROOK ESTATES"
Multi Unit & Single Family Subdivision Layout
LANCASTER, MASSACHUSETTS

PREPARED FOR:
CRESCENT BUILDERS, INC.
94 NORTH MAIN STREET
BOYLSTON MA 01583

GLM Engineering Consultants, Inc.
19 EXCHANGE STREET
HOLLISTON, MA 01746
P: 508–429–1100
F: 508–429–7160
www.GLMengineering.com

DRW.: RST
JOB No. 12,274
DATE: FEBRUARY 8, 2018
SCALE: nts
SHEET: 21 of 27
PLAN #: 27,147

NOTE:
STREET TREES SHALL BE PLANTED AT INTERVALS OF FORTY (40) FEET SPACING ALONG BOTH SIDES OF THE ROADWAY.
TREES SHALL BE WELL BRANCHED, NURSERY GROWN AT LEAST 2.5 INCH TRUNK DIAMETER AT FOUR (4) FEET ABOVE GROUND LEVEL.

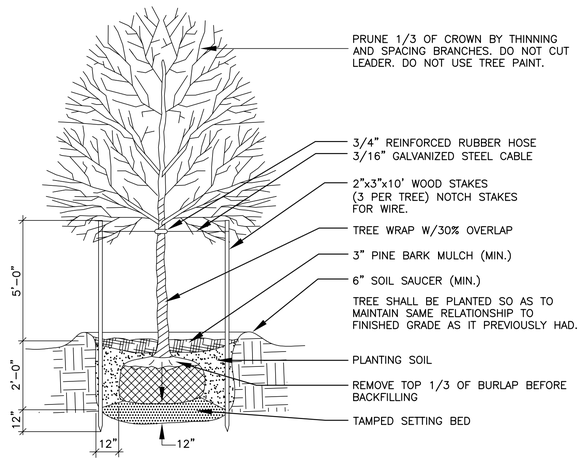

TYP. DECIDUOUS TREE PLANTING DETAIL

NOT TO SCALE

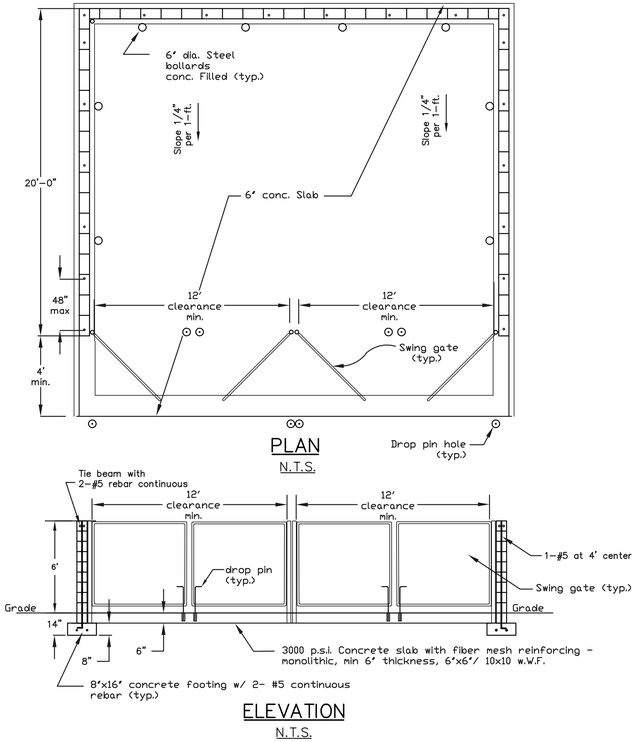

PLAN
N.T.S.

ELEVATION
N.T.S.

DUMPSTER PAD & SCREENING DETAIL

NOT TO SCALE

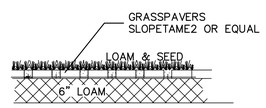

Invisible Structure, Inc.
1600 Jackson St., Suite 310
Golden, Colorado 80401
800-233-1510

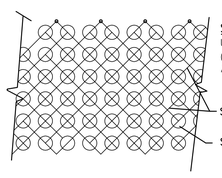

SPECIFICATIONS
Unit Size – 50cm x 50cm x 2.5 cm (20"x20"x1")
Available in 9 standard roll sizes

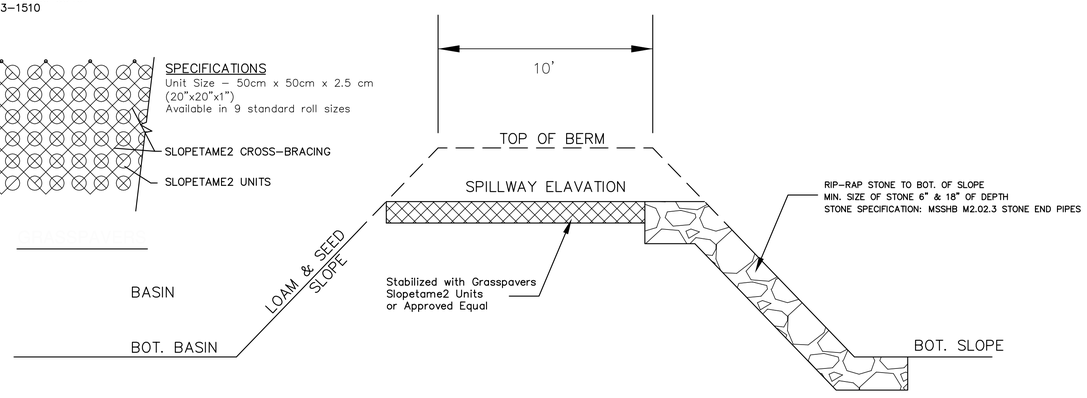

DETENTION BASIN EMERGENCY SPILLWAY DETAIL

NOT TO SCALE

DETAILS

REVISIONS

No.	DATE	DESCRIPTION
1	04/10/18	APARTMENTS 136 UNITS
2	07/06/18	PLAN LAYOUT & DRAINAGE
3	07/25/18	WATER SYSTEM COMMENTS
4	09/18/18	ENGINEERING COMMENTS

SITE DEVELOPMENT PLAN
"GOODRIDGE BROOK ESTATES"
Multi Unit & Single Family Subdivision Layout
LANCASTER, MASSACHUSETTS

PREPARED FOR:
CRESCENT BUILDERS, INC.
94 NORTH MAIN STREET
BOYLSTON MA 01583

GLM Engineering Consultants, Inc.
19 EXCHANGE STREET
HOLLISTON, MA 01746
P: 508-429-1100
F: 508-429-7160
www.GLMengineering.com

DRW.: RST
JOB No. 12,274
DATE: FEBRUARY 8, 2018
SCALE: nts
SHEET: 22 of 27
PLAN #: 27,147

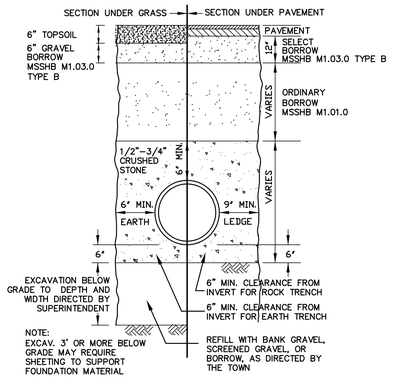

TYPICAL SECTION EARTH/ROCK TRENCH

DRAIN PIPES, SEWER MAINS, FORCE MAINS, & WATER MAINS
N.T.S

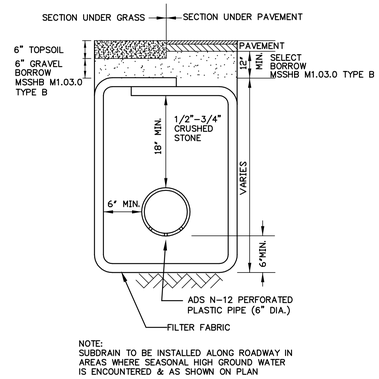

NOTE:
SUBDRAIN TO BE INSTALLED ALONG ROADWAY IN AREAS WHERE SEASONAL HIGH GROUND WATER IS ENCOUNTERED & AS SHOWN ON PLAN

SUBDRAIN DETAIL

N.T.S.

MANUFACTURED BY:
SOTUATE/RAY
PRECAST CONCRETE PRODUCTS CORP.
MARSHFIELD, MA
1-800-440-0009

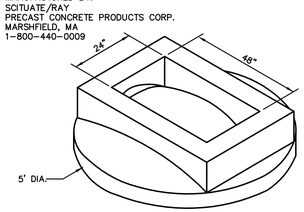

1. MANUFACTURED TO MEET OR EXCEED ASTM C-478 & AASHTO M 199 SPECS.
2. REINFORCING SHALL CONFORM TO ASTM A-185 AND BE PLACED AS PER ASTM C-478 (8.1, 8.3)
3. CONCRETE = 4000 PSI MIN. AND CEMENT PER ASTMC-478 (6.1)
4. MANHOLE STEPS - POLYPROPLENE COATED GRADE 60 R-BAR PER ASTM C-478 & OSHA (STD. 1-19)
5. BUTYL RUBBER JOINT SEALANT PER ASTM C-990 & AASHTO M-198
6. WATERPROOFING PER CONTRACT SPECS. AS REQUIRED.
7. DESIGNED FOR H-20 LOADING.

DOUBLE OPEN CATCH BASIN DOME TOP

NOT TO SCALE

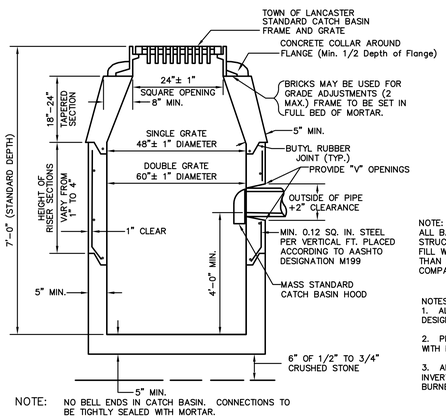

NOTE: NO BELL ENDS IN CATCH BASIN. CONNECTIONS TO BE TIGHTLY SEALED WITH MORTAR.

NOTE:
ALL BACKFILL AROUND STRUCTURE SHALL BE CLEAN FILL WITH NO STONES LARGER THAN 6 INCH AND COMPACTED.

NOTES:
1. ALL MANHOLES SHALL BE DESIGNED FOR H-20 LOADING
2. PLUG ALL LIFTING HOLES WITH NON-SHRINK MORTAR
3. ALL BRICK USED FOR M.H. INVERTS TO BE A HARD BURNER SEWER BRICK

PRECAST CONCRETE CATCH BASIN DETAILS

NOT TO SCALE

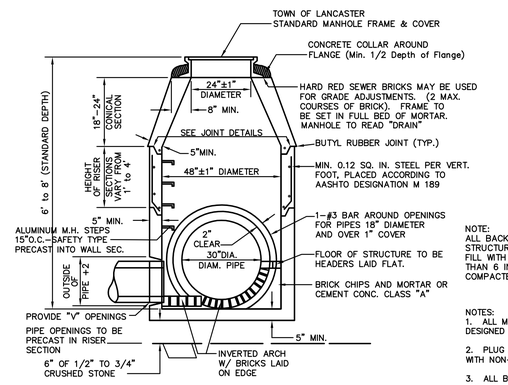

NOTE:
ALL BACKFILL AROUND STRUCTURE SHALL BE CLEAN FILL WITH NO STONES LARGER THAN 6 INCH AND COMPACTED.

NOTES:
1. ALL MANHOLES SHALL BE DESIGNED FOR H-20 LOADING
2. PLUG ALL LIFTING HOLES WITH NON-SHRINK MORTAR
3. ALL BRICK USED FOR M.H. INVERTS TO BE A HARD BURNER SEWER BRICK

PRECAST CONCRETE MANHOLE DETAILS

NOT TO SCALE

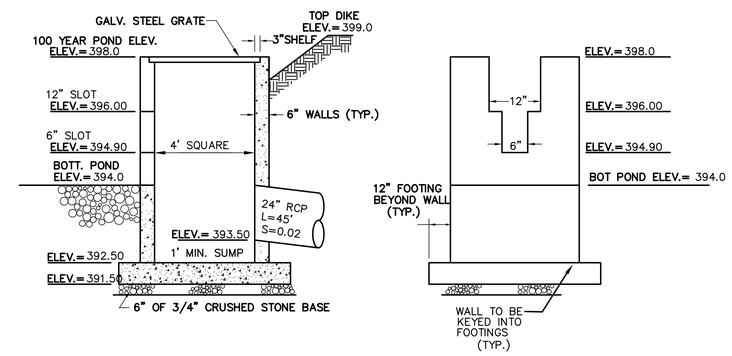

PROPOSED OUTLET CONTROL STRUCTURE DRAINAGE BASIN#5

(PRECAST CONCRETE STRUCTURE)
NOT TO SCALE

D	E	F	G	H	J	L	N	P
12"	2'-6"	4'-8"	3'-2"	4'-0"	2'-0"	1'-6"	1'-2"	3'-5"
15"	2'-9"	5'-4"	3'-3"	4'-3"	2'-3"	1'-6"	1'-3"	3'-9"
18"	3'-0"	6'-4"	3'-6"	4'-6"	2'-6"	1'-6"	1'-6"	4'-1"
21"	3'-3"	7'-0"	3'-8"	4'-9"	2'-9"	1'-6"	1'-8"	4'-4"
24"	3'-6"	7'-5"	3'-9"	5'-0"	3'-0"	1'-6"	1'-9"	4'-7"

1.) ALL CONCRETE DIMENSIONS SHOWN ARE MINIMUM
2.) CONCRETE SHALL BE 4000 P.S.I. MINIMUM
3.) ALL REINFORCING SHALL BE #4 MINIMUM

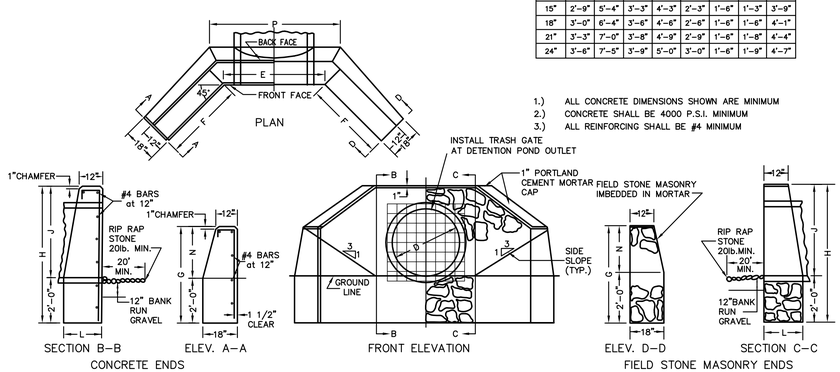

CONCRETE AND FIELD STONE MASONARY HEADWALL DETAILS

NOT TO SCALE

IMPACT BASIN SIZING

FLARED END #	DEPTH "B" (INCHES)	RIP-RAP SIZE D50 (IN.)
1	18.00	6.00
2	18.00	6.00
3	18.00	6.00

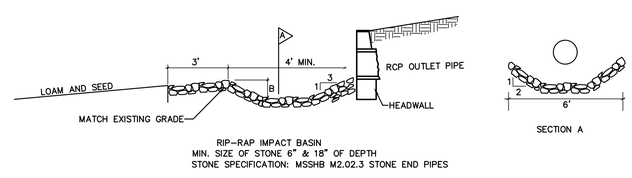

RIP-RAP IMPACT BASIN
MIN. SIZE OF STONE 6" & 18" OF DEPTH
STONE SPECIFICATION: MSSHB M2.02.3 STONE END PIPES

RIP-RAP IMPACT BASIN AT HEADWALLS

NOT TO SCALE

DETAILS

REVISIONS

No.	DATE	DESCRIPTION
1	04/10/18	APARTMENTS 136 UNITS
2	07/06/18	PLAN LAYOUT & DRAINAGE
3	07/25/18	WATER SYSTEM COMMENTS
4	09/18/18	ENGINEERING COMMENTS

SITE DEVELOPMENT PLAN
"GOODRIDGE BROOK ESTATES"
Multi Unit & Single Family Subdivision Layout
LANCASTER, MASSACHUSETTS

PREPARED FOR:
CRESCENT BUILDERS, INC.
94 NORTH MAIN STREET
BOYLSTON MA 01583

GLM Engineering Consultants, Inc.
19 EXCHANGE STREET
HOLLISTON, MA 01746
P: 508-429-1100
F: 508-429-7160
www.GLMengineering.com

DRW.: RST
JOB No. 12,274
DATE: FEBRUARY 8, 2018
SCALE: nts
SHEET: 23 of 27
PLAN #: 27,147

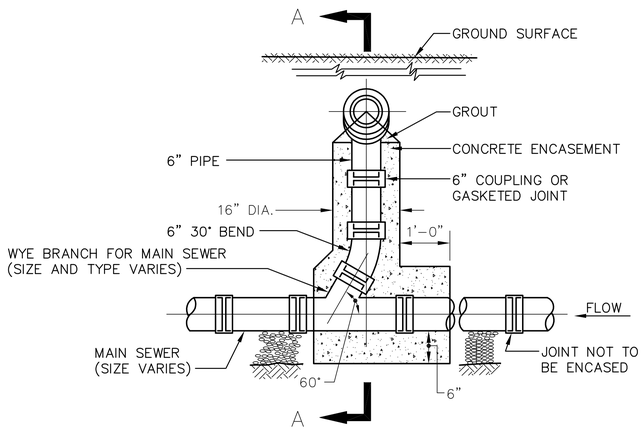

ELEVATION

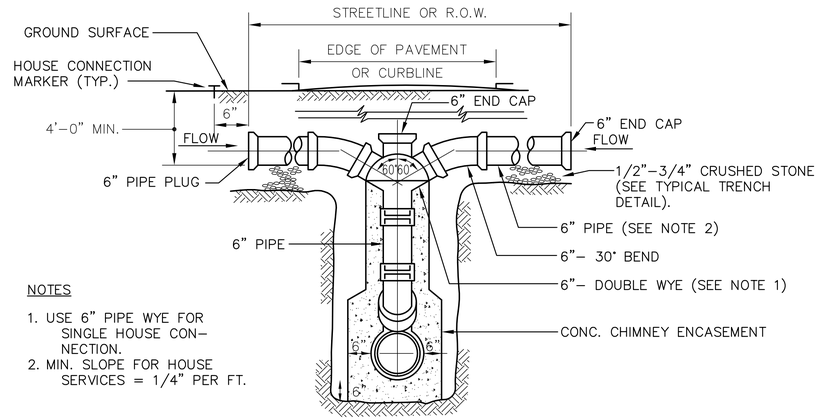

NOTES

1. USE 6" PIPE WYE FOR SINGLE HOUSE CONNECTION.
2. MIN. SLOPE FOR HOUSE SERVICES = 1/4" PER FT.

SECTION A–A

TYPICAL HOUSE SERVICE CONNECTION & CHIMNEY DETAIL

(FOR MAIN SEWER OVER 8'–0" DEEP)
NOT TO SCALE

NOTE:

IT SHALL BE THE RESPONSIBILITY OF THE CONTRACTOR TO VERIFY LOCATIONS AND ELEVATIONS OF EXISTING UTILITIES PRIOR TO COMMENCEMENT OF ANY CONSTRUCTION

DIGSAFE IS TO BE NOTIFIED 72 WORKING HOURS IN ADVANCE OF CONSTRUCTION.
DIGSAFE 1–888–DIG–SAFE

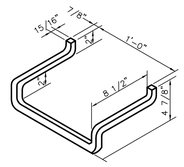

MANHOLE STEP DETAIL

NOT TO SCALE

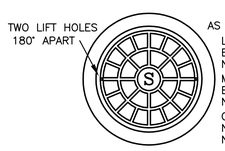

AS MANUFACTURED BY:
LE BARON FONDRY CO.
BROCKTON, MA
No. LT 101
MECHANICS IRON FOUNDRY CO.
BOSTON, MA
No. K 6004
C.M. WHITE IRON WORKS
NORTH READING, MA
No. R 258

NOTE:
FOR WATERTIGHT APPLICATIONS USE THE FOLLOWING CASTINGS:
LE BARON FOUNDRY CO.
WATERTIGHT M.H. FRAME & COVER
No. LBW268–2
OR
LE BARON FOUNDRY CO.
BOLTED & GASKETED FRAME & COVER
No. LBB268–2
OR APPROVED EQUAL

CAST IRON MANHOLE FRAME AND COVER

MIN. WEIGHT=450# PER SET

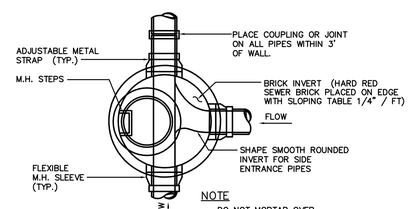

NOTE
DO NOT MORTAR OVER INTERIOR BRICK WORK.

PLAN

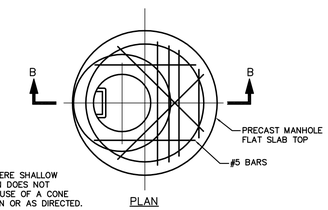

NOTE
FOR USE WHERE SHALLOW INSTALLATION DOES NOT PERMIT THE USE OF A CONE TYPE SECTION OR AS DIRECTED.

PLAN

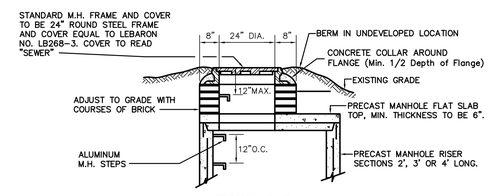

SECTION B–B

FLAT TOP SECTION

NOT TO SCALE

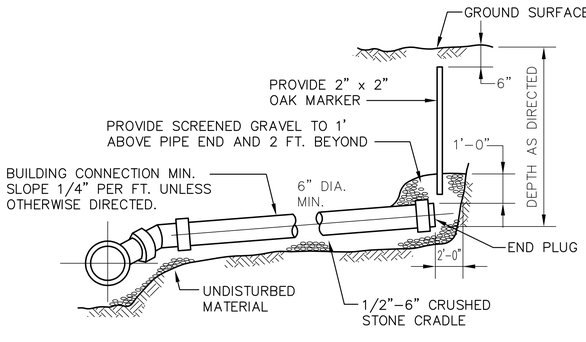

SECTION

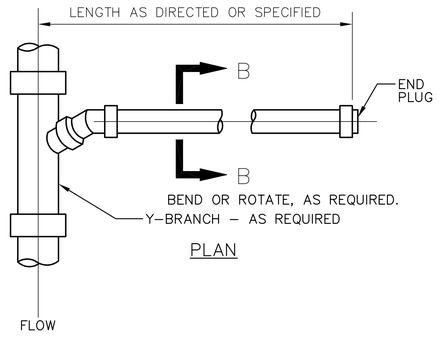

PLAN

TYPICAL BUILDING CONNECTION

NOT TO SCALE

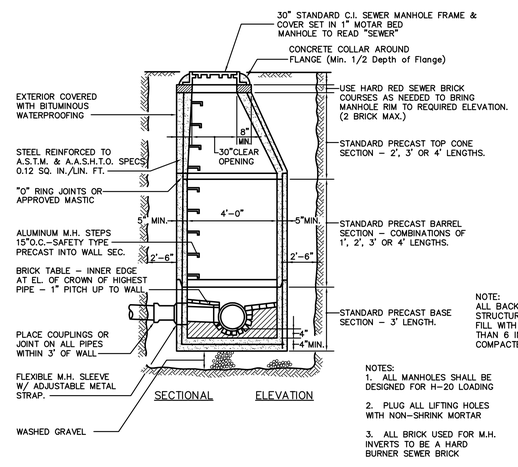

NOTES:
1. ALL MANHOLES SHALL BE DESIGNED FOR H–20 LOADING
2. PLUG ALL LIFTING HOLES WITH NON–SHRINK MORTAR
3. ALL BRICK USED FOR M.H. INVERTS TO BE A HARD BURNER SEWER BRICK

TYPICAL SEWER MANHOLE DETAIL

NOT TO SCALE

NOTE:
ALL BACKFILL AROUND STRUCTURE SHALL BE CLEAN FILL WITH NO STONES LARGER THAN 6 INCH AND COMPACTED.

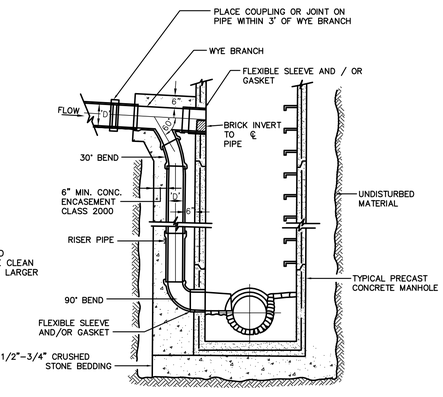

TYPICAL DROP INLET MANHOLE DETAILS

NOTE:

NOT TO SCALE

DIGSAFE 1–888–DIG–SAFE

DETAILS

REVISIONS		
No.	DATE	DESCRIPTION
1	04/10/18	APARTMENTS 136 UNITS
2	07/06/18	PLAN LAYOUT & DRAINAGE
3	07/25/18	WATER SYSTEM COMMENTS
4	09/18/18	ENGINEERING COMMENTS

SITE DEVELOPMENT PLAN
"GOODRIDGE BROOK ESTATES"
Multi Unit & Single Family Subdivision Layout
LANCASTER, MASSACHUSETTS

PREPARED FOR:
CRESCENT BUILDERS, INC.
94 NORTH MAIN STREET
BOYLSTON MA 01583

GLM Engineering Consultants, Inc.
19 EXCHANGE STREET
HOLLISTON, MA 01746
P: 508–429–1100
F: 508–429–7160
www.GLMengineering.com

DRW.: RST
JOB No. 12,274
DATE: FEBRUARY 8, 2018
SCALE: nts
SHEET: 24 of 27
PLAN #: 27,147

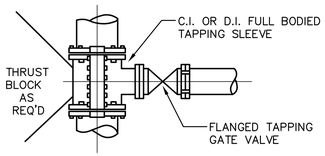

TAPPING SLEEVE AND VALVE DETAIL

NOT TO SCALE

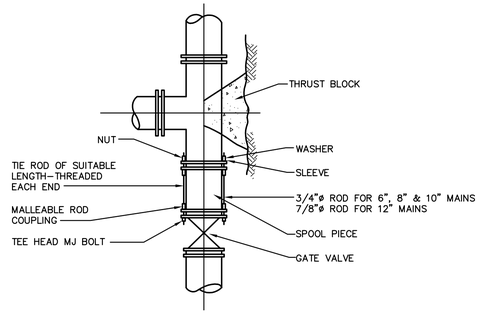

TYPICAL TIED MECHANICAL JOINT VALVE CONNECTION DETAILS

NOT TO SCALE

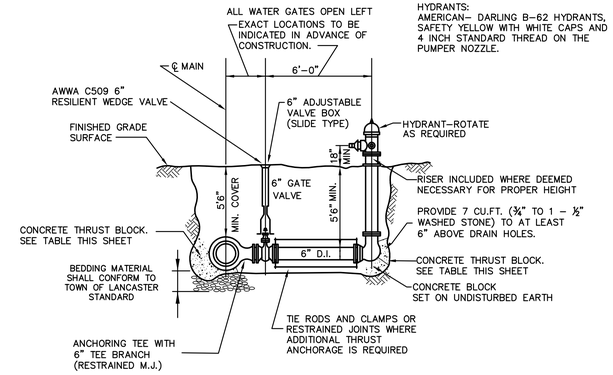

TYPICAL HYDRANT ASSEMBLY DETAIL

NOT TO SCALE

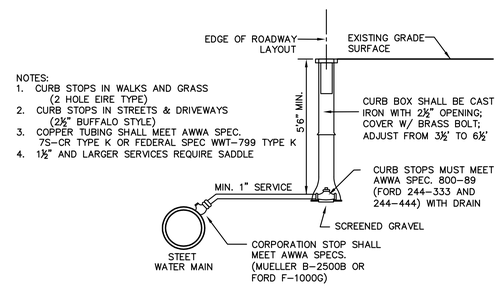

NOTES:
1. CURB STOPS IN WALKS AND GRASS (2 HOLE EIRE TYPE)
2. CURB STOPS IN STREETS & DRIVEWAYS (2½" BUFFALO STYLE)
3. COPPER TUBING SHALL MEET AWWA SPEC. 7S–CR TYPE K OR FEDERAL SPEC WWT–799 TYPE K
4. 1½" AND LARGER SERVICES REQUIRE SADDLE

TYPICAL NEW WATER SERVICE CONNECTION DETAIL

NOT TO SCALE

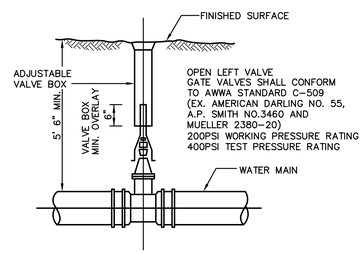

TYPICAL GATE VALVE

NOT TO SCALE

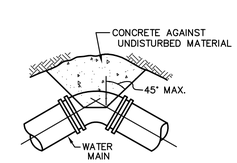

TYPICAL BEND

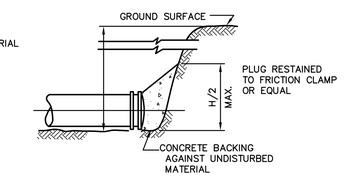

TYPICAL PLUG

NOTE: CONCRETE FOR THRUST BLOCKS SHALL BE NO LONGER THAN THE RATIO OF 2 1/2 : 5 1/2 AND SHALL HAVE A MINIMUM COMPRESSION STRENGTH OF 2000 PSI (SO THAT FLANGES AND BOLTS ARE ACCESSIBLE.)

BEARING AREAS OF THRUST BLOCKS (BEARING AREA IN SQUARE FT.)

PIPE SIZE INCHES	1/4 BEND	1/8 BEND	1/16 BEND OR LESS	PLUG TEES
6 AND 8	8	8		8
10 AND 12	22	13	8	16

TYPICAL THRUST BLOCK DETAIL

NOT TO SCALE

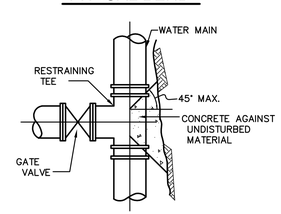

TYPICAL TEE

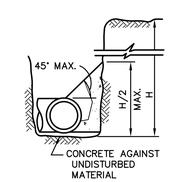

TYPICAL SECTION

NOTES:
ALL WATER DETAILS MANUFACTURERS & CONSTRUCTION STANDARDS SHALL CONFORM TO THE TOWN OF LANCASTER STANDARDS,

DETAILS

REVISIONS

No.	DATE	DESCRIPTION
1	04/10/18	APARTMENTS 136 UNITS
2	07/06/18	PLAN LAYOUT & DRAINAGE
3	07/25/18	WATER SYSTEM COMMENTS
4	09/18/18	ENGINEERING COMMENTS

SITE DEVELOPMENT PLAN
"GOODRIDGE BROOK ESTATES"
Multi Unit & Single Family Subdivision Layout
LANCASTER, MASSACHUSETTS

PREPARED FOR:
CRESCENT BUILDERS, INC.
94 NORTH MAIN STREET
BOYLSTON MA 01583

GLM Engineering Consultants, Inc.
19 EXCHANGE STREET
HOLLISTON, MA 01746
P: 508–429–1100
F: 508–429–7160
www.GLMengineering.com

DRW.: RST
JOB No. 12,274
DATE: FEBRUARY 8, 2018
SCALE: nts
SHEET: 25 of 27
PLAN #: 27,147

CDS1515-3-C DESIGN NOTES

CDS1515-3-C RATED TREATMENT CAPACITY IS 1.0 CFS, OR PER LOCAL REGULATIONS.

THE STANDARD CDS1515-3-C CONFIGURATION IS SHOWN.

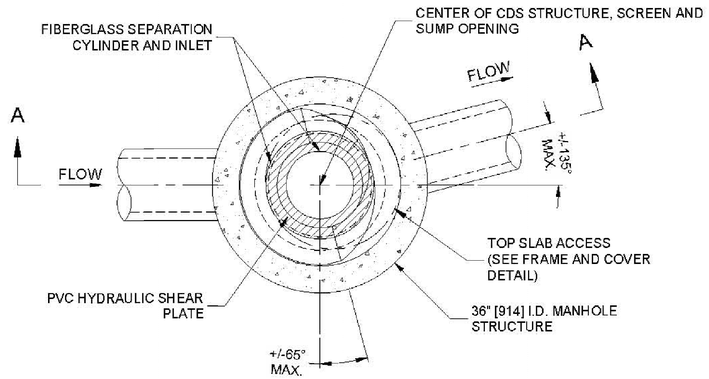

PLAN VIEW B-B
N.T.S.

CDS UNITS TO BE INSTALLED AT:
DRAIN MH#57
DRAIN MH#66
DRAIN MH#77

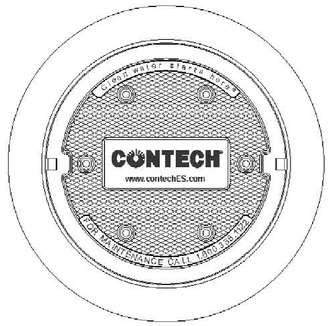

FRAME AND COVER
(DIAMETER VARIES)
N.T.S.

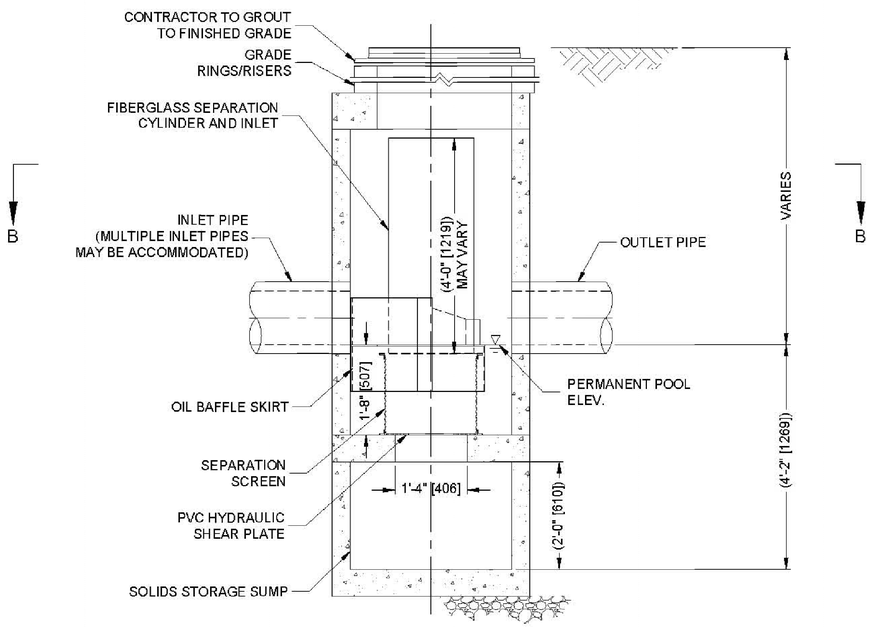

ELEVATION A-A
N.T.S.

GENERAL NOTES
1. CONTECH TO PROVIDE ALL MATERIALS UNLESS NOTED OTHERWISE.
2. FOR SITE SPECIFIC DRAWINGS WITH DETAILED STRUCTURE DIMENSIONS AND WEIGHT, PLEASE CONTACT YOUR CONTECH ENGINEERED SOLUTIONS LLC REPRESENTATIVE. www.ContechES.com
3. CDS WATER QUALITY STRUCTURE SHALL BE IN ACCORDANCE WITH ALL DESIGN DATA AND INFORMATION CONTAINED IN THIS DRAWING. CONTRACTOR TO CONFIRM STRUCTURE MEETS REQUIREMENTS OF PROJECT.
4. STRUCTURE SHALL MEET AASHTO HS20 LOAD RATING, ASSUMING EARTH COVER OF 0' - 2', AND GROUNDWATER ELEVATION AT, OR BELOW, THE OUTLET PIPE INVERT ELEVATION. ENGINEER OF RECORD TO CONFIRM ACTUAL GROUNDWATER ELEVATION. CASTINGS SHALL MEET AASHTO M306 AND BE CAST WITH THE CONTECH LOGO..
5. IF REQUIRED, PVC HYDRAULIC SHEAR PLATE IS PLACED ON SHELF AT BOTTOM OF SCREEN CYLINDER. REMOVE AND REPLACE AS NECESSARY DURING MAINTENANCE CLEANING.
6. CDS STRUCTURE SHALL BE PRECAST CONCRETE CONFORMING TO ASTM C-478 AND AASHTO LOAD FACTOR DESIGN METHOD.

INSTALLATION NOTES
A. ANY SUB-BASE, BACKFILL DEPTH, AND/OR ANTI-FLOTATION PROVISIONS ARE SITE-SPECIFIC DESIGN CONSIDERATIONS AND SHALL BE SPECIFIED BY ENGINEER OF RECORD.
B. CONTRACTOR TO PROVIDE EQUIPMENT WITH SUFFICIENT LIFTING AND REACH CAPACITY TO LIFT AND SET THE CDS MANHOLE STRUCTURE.
C. CONTRACTOR TO INSTALL JOINT SEALANT BETWEEN ALL STRUCTURE SECTIONS AND ASSEMBLE STRUCTURE.
D. CONTRACTOR TO PROVIDE, INSTALL, AND GROUT INLET AND OUTLET PIPE(S). MATCH PIPE INVERTS WITH ELEVATIONS SHOWN. ALL PIPE CENTERLINES TO MATCH PIPE OPENING CENTERLINES.
E. CONTRACTOR TO TAKE APPROPRIATE MEASURES TO ASSURE UNIT IS WATER TIGHT, HOLDING WATER TO FLOWLINE INVERT MINIMUM. IT IS SUGGESTED THAT ALL JOINTS BELOW PIPE INVERTS ARE GROUTED.

CONTECH ENGINEERED SOLUTIONS LLC
www.contechES.com
9025 Centre Pointe Dr., Suite 400, West Chester, OH 45069
800-338-1122 513-645-7000 513-645-7993 FAX

CDS1515-3-C
ONLINE CDS
STANDARD DETAIL

DRAINAGE TREATMENT UNITS

REVISIONS

No.	DATE	DESCRIPTION
1	04/10/18	APARTMENTS 136 UNITS
2	07/06/18	PLAN LAYOUT & DRAINAGE
3	07/25/18	WATER SYSTEM COMMENTS
4	09/18/18	ENGINEERING COMMENTS

SITE DEVELOPMENT PLAN
"GOODRIDGE BROOK ESTATES"
Multi Unit & Single Family Subdivision Layout
LANCASTER, MASSACHUSETTS

PREPARED FOR:
CRESCENT BUILDERS, INC.
94 NORTH MAIN STREET
BOYLSTON MA 01583

GLM Engineering Consultants, Inc.
19 EXCHANGE STREET
HOLLISTON, MA 01746
P: 508-429-1100
F: 508-429-7160
www.GLMengineering.com

DRW.: RST
JOB No. 12,274
DATE: FEBRUARY 8, 2018
SCALE: nts
SHEET: 26 of 27
PLAN #: 27,147

DEEP HOLE – #08–1

HORIZ DEPTH	DATE: 01/28/08 SOIL DESCRIPTION	ELEV.
0"	A – TOPSOIL	404.0
6"		403.5
16"	B – SILT LOAM	402.2
84"	C – FINE SILT LOAM, 5 % GRAVEL	397.0
28"	GROUNDWATER OBSERVED (STANDING / WEEPING)	401.7
24"	SOIL MOTTLING	402.0
24"	ESTIMATED SEASONAL HIGH GROUNDWATER	**402.0**

DEEP HOLE – #08–2

HORIZ DEPTH	DATE: 01/28/08 SOIL DESCRIPTION	ELEV.
0"	A – TOPSOIL	406.0
4"		405.7
12"	B – SANDY LOAM	405.0
80"	C – SILT LOAM	399.3
38"	GROUNDWATER OBSERVED (STANDING / WEEPING)	402.8
30"	SOIL MOTTLING – FAINT	403.5
30"	ESTIMATED SEASONAL HIGH GROUNDWATER	**403.5**

DEEP HOLE – #08–3

HORIZ DEPTH	DATE: 01/28/08 SOIL DESCRIPTION	ELEV.
0"	A – TOPSOIL	402.0
2"		401.8
10"	B – SILT LOAM	401.2
115"	C – SILT LOAM	392.4
NA	GROUNDWATER OBSERVED (STANDING / WEEPING)	
86"	SOIL MOTTLING – FAINT	394.8
86"	ESTIMATED SEASONAL HIGH GROUNDWATER	**394.8**

DEEP HOLE – #08–4

HORIZ DEPTH	DATE: 01/28/08 SOIL DESCRIPTION	ELEV.
0"	A – TOPSOIL	402.2
4"		401.9
14"	B – SILT LOAM	401.0
76"	C – SILT LOAM	395.9
NA	GROUNDWATER OBSERVED (STANDING / WEEPING)	
NA	SOIL MOTTLING – FAINT	
	ESTIMATED SEASONAL HIGH GROUNDWATER	

DEEP HOLE – #08–5

HORIZ DEPTH	DATE: 01/28/08 SOIL DESCRIPTION	ELEV.
0"	A – TOPSOIL	404.5
8"		403.8
26"	B – SILT LOAM	402.3
108"	C – SILT LOAM	395.5
48"	GROUNDWATER OBSERVED (STANDING / WEEPING)	400.5
34"	SOIL MOTTLING – FAINT	401.7
34"	ESTIMATED SEASONAL HIGH GROUNDWATER	**401.7**

DEEP HOLE – #08–6

HORIZ DEPTH	DATE: 03/28/06 SOIL DESCRIPTION	ELEV.
0"	A – TOPSOIL	406.3
3"		406.0
26"	B – SILT LOAM	404.1
72"	C – SILT LOAM	400.3
48"	GROUNDWATER OBSERVED (STANDING / WEEPING)	402.3
38"	SOIL MOTTLING – FAINT	403.1
38"	ESTIMATED SEASONAL HIGH GROUNDWATER	**403.1**

DEEP HOLE – #08–7

HORIZ DEPTH	DATE: 01/28/08 SOIL DESCRIPTION	ELEV.
0"	A – TOPSOIL	401.2
2"		401.0
10"	B – SANDY LOAM	400.4
92"	C – SANDY LOAM	393.5
NA	GROUNDWATER OBSERVED (STANDING / WEEPING)	
NA	SOIL MOTTLING – FAINT	
NA	ESTIMATED SEASONAL HIGH GROUNDWATER	

DEEP HOLE – #08–8

HORIZ DEPTH	DATE: 01/28/08 SOIL DESCRIPTION	ELEV.
0"	A – TOPSOIL	394.0
2"		393.8
20"	B – SILT LOAM	392.3
48"	C1– COURSE SAND	390.0
108"	C1– FINE SAND	385.0
52"	GROUNDWATER OBSERVED (STANDING / WEEPING)	389.7
42"	SOIL MOTTLING – FAINT	390.5
42"	ESTIMATED SEASONAL HIGH GROUNDWATER	**390.5**

DEEP HOLE – #08–9

HORIZ DEPTH	DATE: 01/28/08 SOIL DESCRIPTION	ELEV.
0"	A – TOPSOIL	398.5
3"		398.3
10"	B – SANDY LOAM	397.7
102"	C – SANDY LOAM	390.0
80"	GROUNDWATER OBSERVED (STANDING / WEEPING)	391.8
74"	SOIL MOTTLING – FAINT	392.3
74"	ESTIMATED SEASONAL HIGH GROUNDWATER	**392.3**

DEEP HOLE – #08–10

HORIZ DEPTH	DATE: 01/28/08 SOIL DESCRIPTION	ELEV.
0"	A – TOPSOIL	398.0
3"		397.8
8"	B – SANDY LOAM	397.3
48"	C1 – SANDY LOAM	394.0
76"	C2 – SILTY LOAM	391.7
108"	C3 – SILTY LOAM WITH SHALE	389.0
88"	GROUNDWATER OBSERVED (STANDING / WEEPING)	390.7
78"	SOIL MOTTLING – FAINT	391.5
78"	ESTIMATED SEASONAL HIGH GROUNDWATER	**391.5**

DEEP HOLE – #1

HORIZ DEPTH	DATE: 03/28/06 SOIL DESCRIPTION	ELEV.
0"	A – TOPSOIL	401.8
4"		401.5
19"	B–FINE SANDY LOAM	401.6
108"	C – FINE SILT LOAM, 20% GRAVEL	392.8
48"	GROUNDWATER OBSERVED (STANDING / WEEPING)	397.8
24"	SOIL MOTTLING – FAINT	399.8
24"	ESTIMATED SEASONAL HIGH GROUNDWATER	**399.8**

DEEP HOLE – #2

HORIZ DEPTH	DATE: 03/28/06 SOIL DESCRIPTION	ELEV.
0"	A – TOPSOIL	404.3
8"		403.6
18"	B–FINE SANDY LOAM	402.8
108"	C – SILT LOAM	395.3
18"	GROUNDWATER OBSERVED (STANDING / WEEPING)	402.8
18"	SOIL MOTTLING – FAINT	402.8
18"	ESTIMATED SEASONAL HIGH GROUNDWATER	**402.8**

DEEP HOLE – #3

HORIZ DEPTH	DATE: 03/28/06 SOIL DESCRIPTION	ELEV.
0"	A – TOPSOIL	398.6
8"		397.9
12"	B–FINE SANDY LOAM	397.6
108"	C – SILT LOAM	389.6
72"	GROUNDWATER OBSERVED (STANDING / WEEPING)	392.6
NA	SOIL MOTTLING – FAINT	
72"	ESTIMATED SEASONAL HIGH GROUNDWATER	**392.6**

DEEP HOLE – #4

HORIZ DEPTH	DATE: 03/28/06 SOIL DESCRIPTION	ELEV.
0"	A – TOPSOIL	402.2
6"		401.7
19"	B–FINE SANDY LOAM	400.6
120"	C – SILT LOAM	392.2
92"	GROUNDWATER OBSERVED (STANDING / WEEPING)	394.5
NA	SOIL MOTTLING – FAINT	
92"	ESTIMATED SEASONAL HIGH GROUNDWATER	**394.5**

DEEP HOLE – #5

HORIZ DEPTH	DATE: 03/28/06 SOIL DESCRIPTION	ELEV.
0"	A – TOPSOIL	406.6
6"		406.1
18"	B – SANDY LOAM	405.1
37"	C1 – SANDY LOAM	403.5
113"	C2 – SILT LOAM	397.2
28"	GROUNDWATER OBSERVED (STANDING / WEEPING)	404.3
28"	SOIL MOTTLING – FAINT	404.3
28"	ESTIMATED SEASONAL HIGH GROUNDWATER	**404.3**

DEEP HOLE – #6

HORIZ DEPTH	DATE: 03/28/06 SOIL DESCRIPTION	ELEV.
0"	A – TOPSOIL	407.5
6"		407.0
20"	B – SANDY LOAM	405.8
36"	C1 – SANDY LOAM	404.5
113"	C2 – SILT LOAM	398.1
51"	GROUNDWATER OBSERVED (STANDING / WEEPING)	403.3
24"	SOIL MOTTLING	405.5
24"	ESTIMATED SEASONAL HIGH GROUNDWATER	**405.5**

DEEP HOLE – #7

HORIZ DEPTH	DATE: 03/28/06 SOIL DESCRIPTION	ELEV.
0"	A – TOPSOIL	403.0
8"		402.3
28"	B – SILT LOAM	400.7
38"	C1 – SANDY LOAM	399.8
108"	C2 – SILT LOAM	394.0
36"	GROUNDWATER OBSERVED (STANDING / WEEPING)	400.0
NA	SOIL MOTTLING	
36"	ESTIMATED SEASONAL HIGH GROUNDWATER	**400.0**

DEEP HOLE – #8

HORIZ DEPTH	DATE: 03/28/06 SOIL DESCRIPTION	ELEV.
0"	A – TOPSOIL	407.0
6"		406.5
16"	B – SILT LOAM	405.2
108"	C – SILT LOAM	397.5
48"	GROUNDWATER OBSERVED (STANDING / WEEPING)	403.0
NA	SOIL MOTTLING	
48"	ESTIMATED SEASONAL HIGH GROUNDWATER	**403.0**

DEEP HOLE – #9

HORIZ DEPTH	DATE: 03/28/06 SOIL DESCRIPTION	ELEV.
0"	A – TOPSOIL	418.1
8"		417.4
28"	B – SILT LOAM	415.8
40"	C1 – SANDY LOAM	414.8
108"	C2 – SILT LOAM	409.1
44"	GROUNDWATER OBSERVED (STANDING / WEEPING)	414.4
NA	SOIL MOTTLING	
44"	ESTIMATED SEASONAL HIGH GROUNDWATER	**414.4**

DEEP HOLE – #10

HORIZ DEPTH	DATE: 03/28/06 SOIL DESCRIPTION	ELEV.
0"	A – TOPSOIL	410.1
8"		409.4
18"	B–FINE SANDY LOAM	408.6
28"	C1 – SANDY LOAM	407.8
108"	C2 – SILT LOAM	401.1
60"	GROUNDWATER OBSERVED (STANDING / WEEPING)	405.1
NA	SOIL MOTTLING	
60"	ESTIMATED SEASONAL HIGH GROUNDWATER	**405.1**

DEEP HOLE – #18–1 (Basin 5)

HORIZ DEPTH	DATE: 8/14/18 SOIL DESCRIPTION	ELEV.
0"	A – TOPSOIL	394.0
4"		393.7
26"	B – SILT LOAM	391.8
132"	C1 – LOAMY SAND	383.0
120"	GROUNDWATER OBSERVED (STANDING / WEEPING)	384.0
NA	SOIL MOTTLING	
	ESTIMATED SEASONAL HIGH GROUNDWATER	

DEEP HOLE – #18–2 (Basin 4)

HORIZ DEPTH	DATE: 8/14/18 SOIL DESCRIPTION	ELEV.
0"	A – TOPSOIL	400.0
4"		399.7
30"	B – SILT LOAM	397.5
84"	C – LOAMY SAND	393.0
74"	GROUNDWATER OBSERVED (STANDING / WEEPING)	393.8
30"	SOIL MOTTLING	**397.5**
30"	ESTIMATED SEASONAL HIGH GROUNDWATER	**397.5**

DEEP HOLE – #18–3 (Basin 2)

HORIZ DEPTH	DATE: 03/28/06 SOIL DESCRIPTION	ELEV.
0"	A – TOPSOIL	398.0
4"		397.7
32"	B – SILT LOAM	395.3
62"	C1 – LOAMY SAND	392.8
	GROUNDWATER OBSERVED (STANDING / WEEPING)	
32"	SOIL MOTTLING	**395.3**
32"	ESTIMATED SEASONAL HIGH GROUNDWATER	**395.3**

DEEP HOLE – #18–4 (Basin 6)

HORIZ DEPTH	DATE: 8/15/18 SOIL DESCRIPTION	ELEV.
0"	A – TOPSOIL	396.0
6"		395.5
24"	B–FINE SANDY LOAM	394.0
92"	C1 – SAND	388.3
108"	C2 – LOAMY SAND	387.0
None	GROUNDWATER OBSERVED (STANDING / WEEPING)	
90"	SOIL MOTTLING	**388.5**
90"	ESTIMATED SEASONAL HIGH GROUNDWATER	**388.5**

SOIL TEST LOGS

REVISIONS

No.	DATE	DESCRIPTION
1	04/10/18	APARTMENTS 136 UNITS
2	07/06/18	PLAN LAYOUT & DRAINAGE
3	07/25/18	WATER SYSTEM COMMENTS
4	09/18/18	ENGINEERING COMMENTS

SITE DEVELOPMENT PLAN
"GOODRIDGE BROOK ESTATES"
Multi Unit & Single Family Subdivision Layout
LANCASTER, MASSACHUSETTS

PREPARED FOR:
CRESCENT BUILDERS, INC.
94 NORTH MAIN STREET
BOYLSTON MA 01583

GLM Engineering Consultants, Inc.
19 EXCHANGE STREET
HOLLISTON, MA 01746
P: 508–429–1100
F: 508–429–7160
www.GLMengineering.com

DRW.: RST
JOB No. 12,274
DATE: FEBRUARY 8, 2018
SCALE:
SHEET: 27 of 27
PLAN #: 27,147